+7(812) 677-65-53 «Надежная деталь» WWW.NDETAL.COM

SPAREPARTS LIST

Electric Stacker PS 14RP

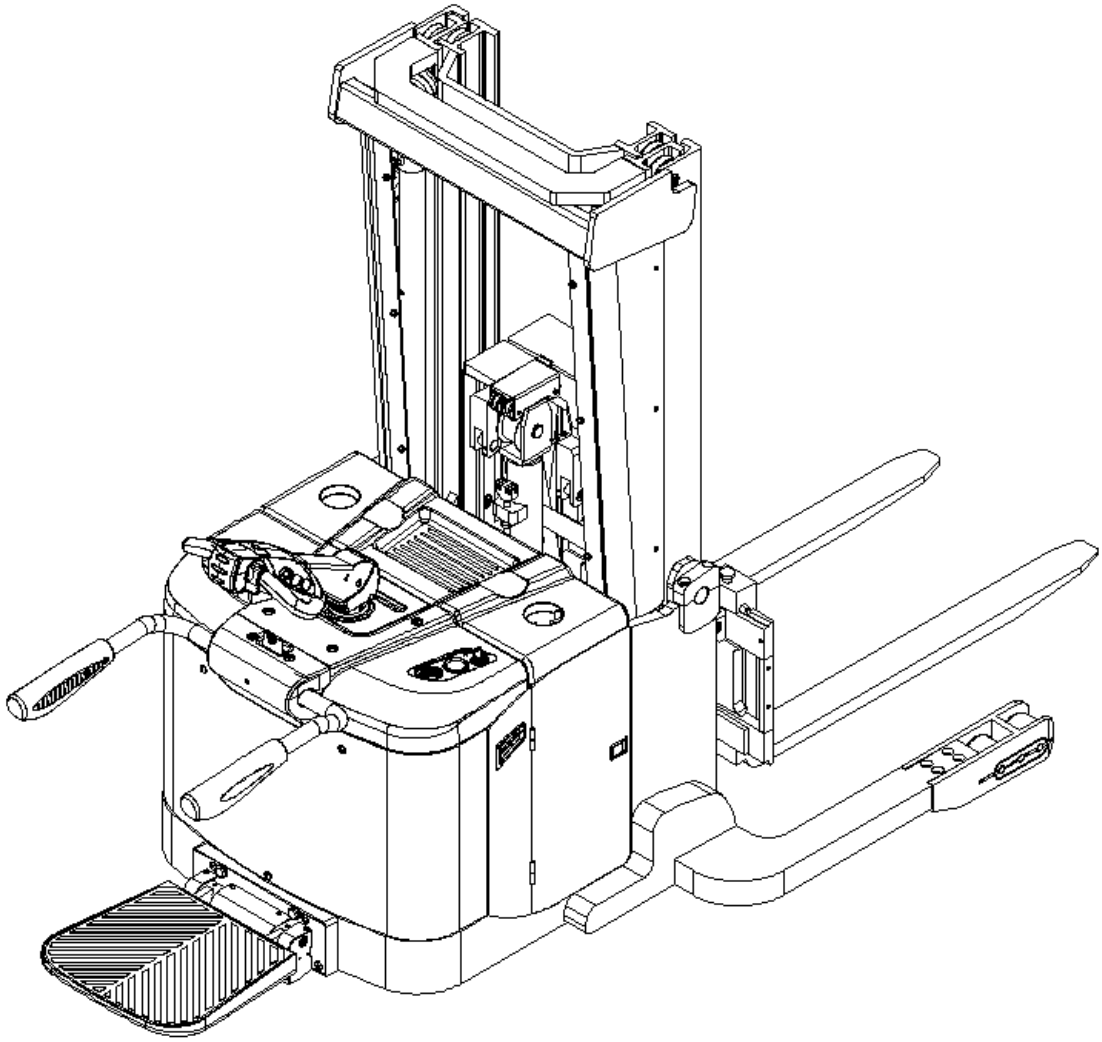

Version 04/2015

From truck identification number:

30130700011

PS 14RP-BPT-004-EN

Catalogue

Fig. 1 Label（for US） 3
Fig. 2 Label（for EU） 5
Fig. 3 Appearance（Three-stage-mast truck leg inside width 1270） 7
Fig. 4 Appearance（Three-stage-mast truck leg inside width 865） 10
Fig. 5 Appearance（Two-stage-mast truck leg inside width 1270） 13
Fig. 6 Appearance（Two-stage-mast truck leg inside width 865） 16
Fig. 7 Scissor assembly（Three-stage-mast） 19
Fig. 8 Scissor assembly（Two-stage-mast） 21
Fig. 9 Fork assembly 23
Fig. 10 Load roller assembly（Tandem） 25
Fig. 11 Load roller assembly（Single） 27
Fig. 12 Mast assembly（Three-stage-mast） 29
Fig. 13 Mast assembly（Two-stage-mast） 34
Fig. 14 Cover structure（Three-stage-mast） 37
Fig. 15 Cover structure（Two-stage-mast） 39
Fig. 16 Truck body 41
Fig. 17 Roller assembly 46
Fig. 18 Drive system 48
Fig. 19 Drive unit（28ELA-AC-1.6KW） 50
Fig. 20 Steering unit（ST DC 2032W） 54
Fig. 21 Controller assembly 56
Fig. 22 Main wire 58
Fig. 23 Indicator assembly 60
Fig. 24 Electrical steering assembly 62
Fig. 25 Lifting hydraulic system（Three-stage-mast） 64
Fig. 26 Lifting hydraulic system（Two-stage-mast） 68
Fig. 27 Reach、 tilt hydraulic system 71
Fig. 28 Lifting cylinder assembly（Three-stage-mast） 73

Fig. 29 Lifting cylinder assembly（Two-stage-mast） 78
Fig. 30 Left lifting cylinder（Three-stage-mast） 80
Fig. 31 Left lifting cylinder（Two-stage-mast） 82
Fig. 32 Right lifting cylinder（Three-stage-mast） 84
Fig. 33 Right lifting cylinder（Two-stage-mast） 86
Fig. 34 Free lifting cylinder 88
Fig. 35 Reach forward cylinder 90
Fig. 36 Tilt cylinder 92
Fig. 37 Main valve group 94
Fig. 38 Reach forward valve group 96
Fig. 39 Pump system（4.0Kw） 98
Fig. 40 Handle arm assembly 100
Fig. 41 Handle 102
Fig. 42 Protective arm 104
Fig. 43 Foldable platform 106
Fig. 44 Battery 108
Easy worn parts list 110

Fig. 1 Label（for US）

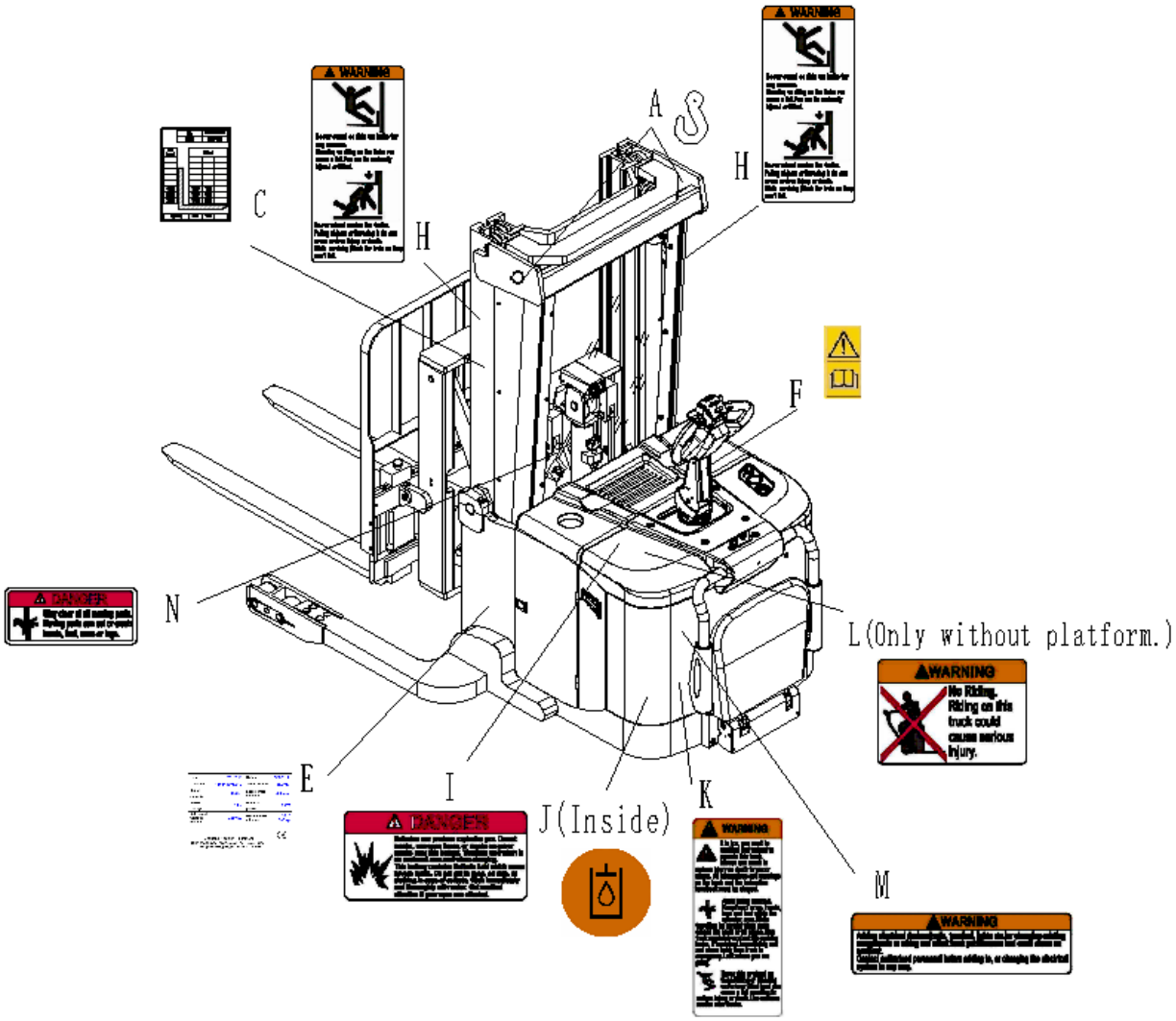

Fig. 1 Label（for US）

No.	Art No.	Description	Qty.	Note
A	9000005967	Crane hook label	2	
C	9000008648	Residual lift capacity sticker	1	
E	9000008647	Identification plate (ID-plate)	1	
F	9000003570	Sticker to read and follow these instructions	1	
H	9000005971	Warning label	2	
I	9000003577	Warning label	1	
J	9000008555	Filling sticker	1	
K	9000003575	Warning label	1	
L	9000003580	Warning label	1	
M	9000003579	Warning label	1	
N	9000005970	Warning label	1	

Fig. 2 Label（for EU）

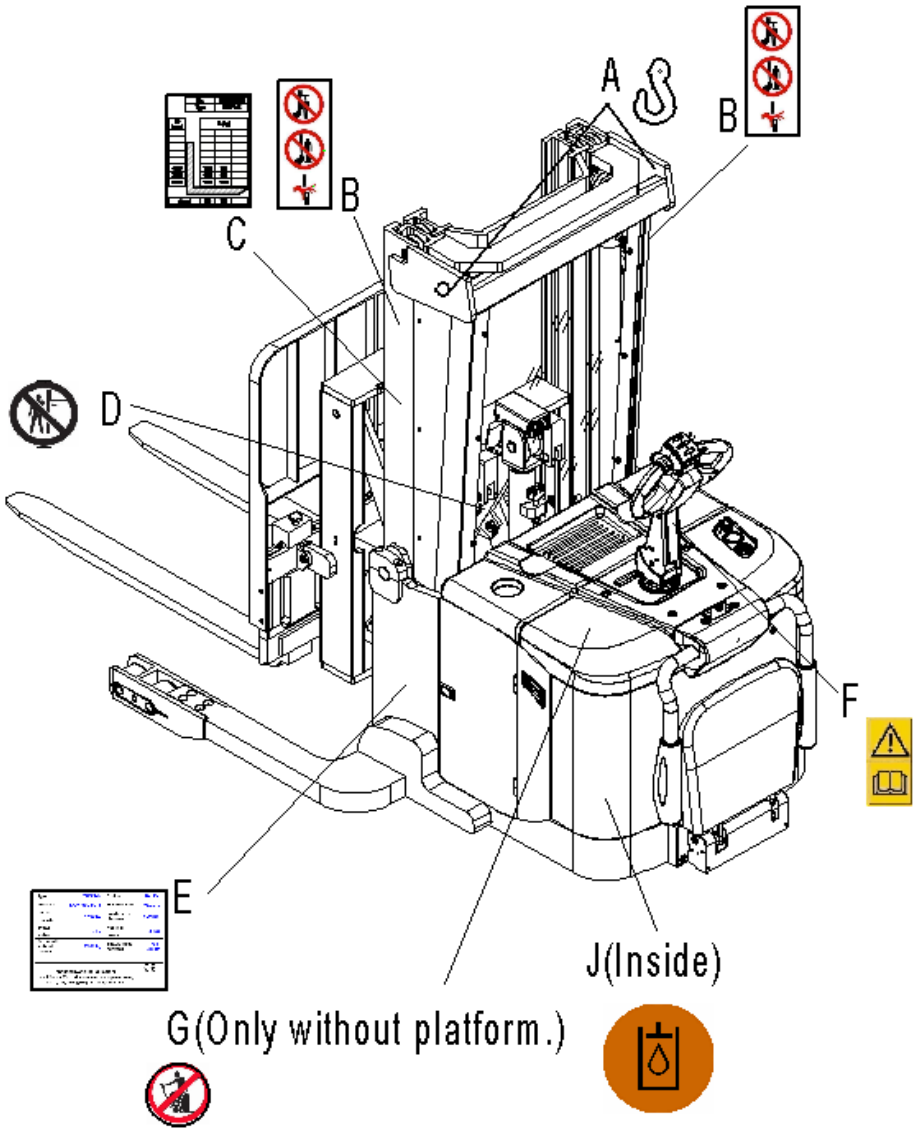

Fig. 2 Label（for EU）

No.	Art No.	Description	Qty.	Note
A	9000005967	Crane hook label	2	
B	9000003923	Warning decal: Do not step under or on the forks	2	
C	9000008648	Residual lift capacity sticker	1	
D	9000008561	Never reach through	1	
E	9000008647	Identification plate	1	
F	9000003570	Sticker to read and follow these instructions	1	
G	9000003573	‘No passengers’ decal	1	
J	9000008555	Filling sticker	1	

Fig. 3 Appearance（Three-stage-mast truck leg inside width 1270）

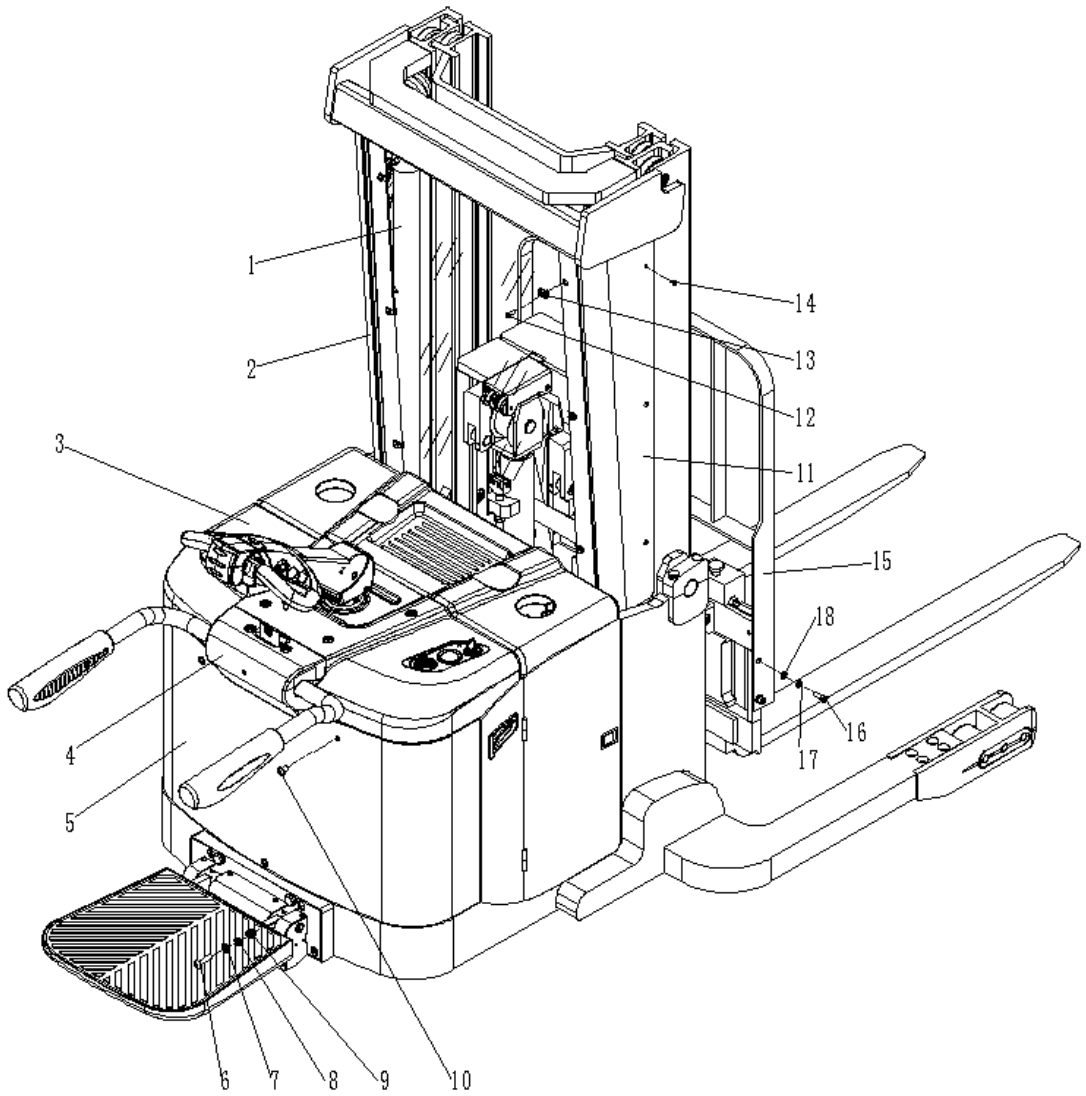

Fig. 3 Appearance（Three-stage-mast truck leg inside width 1270）

No.	Art No.	Description	Qty.	Note	Standard
1	9000007983	Protective plate	1	Three-stage-mast 4000	
	9000009581			Three-stage-mast 4600	
	9000009592			Three-stage-mast5 000	
	9000009603			Three-stage-mast 5500	
2	9000007974	Left protective cover	1	Three-stage-mast 4000	
	9000009578			Three-stage-mast 4600	
	9000009589			Three-stage-mast5 000	
	9000009600			Three-stage-mast 5500	
3	9000008009	Top cover	1		
4	9000008063	Protective arm cover	1	With protective arm	
	9000008064	Without protective arm cover	1	Without protective arm	
5	9000007994	Welded main cover	1		
6	0090000450	Screw	4	M12×45	GB/T70.2=ISO7380
7	0090000048	Washer	4	12	GB/T97.1=ISO7089
8	0000025024	Washer	4	12	GB/T93
9	0000024006	Nut	4	M12	GB/T889.1=ISO7040
10	9000007791	Screw	9	M10×35	
11	9000007985	Right protective cover	1	Three-stage-mast 4000	
	9000009582			Three-stage-mast	

				4600	
	9000009593			Three-stage-mast 5000	
	9000009604			Three-stage-mast5 500	
12	0090000448	Screw	6	M8×20	GB/T70.2=ISO7380
13	9000007784	Nut	6	M8	
14	0000023045	Screw	6	M6×12	GB/T70.2=ISO7380
15	9000009779	Load backrest	1		
16	0000023088	Screw	4	M10×25	GB/T70.1=ISO4762
17	0000023006	Washer	4	10	GB/T93
18	0000025002	Washer	4	10	GB/T95

Fig. 4 Appearance（Three-stage-mast truck leg inside width 865）

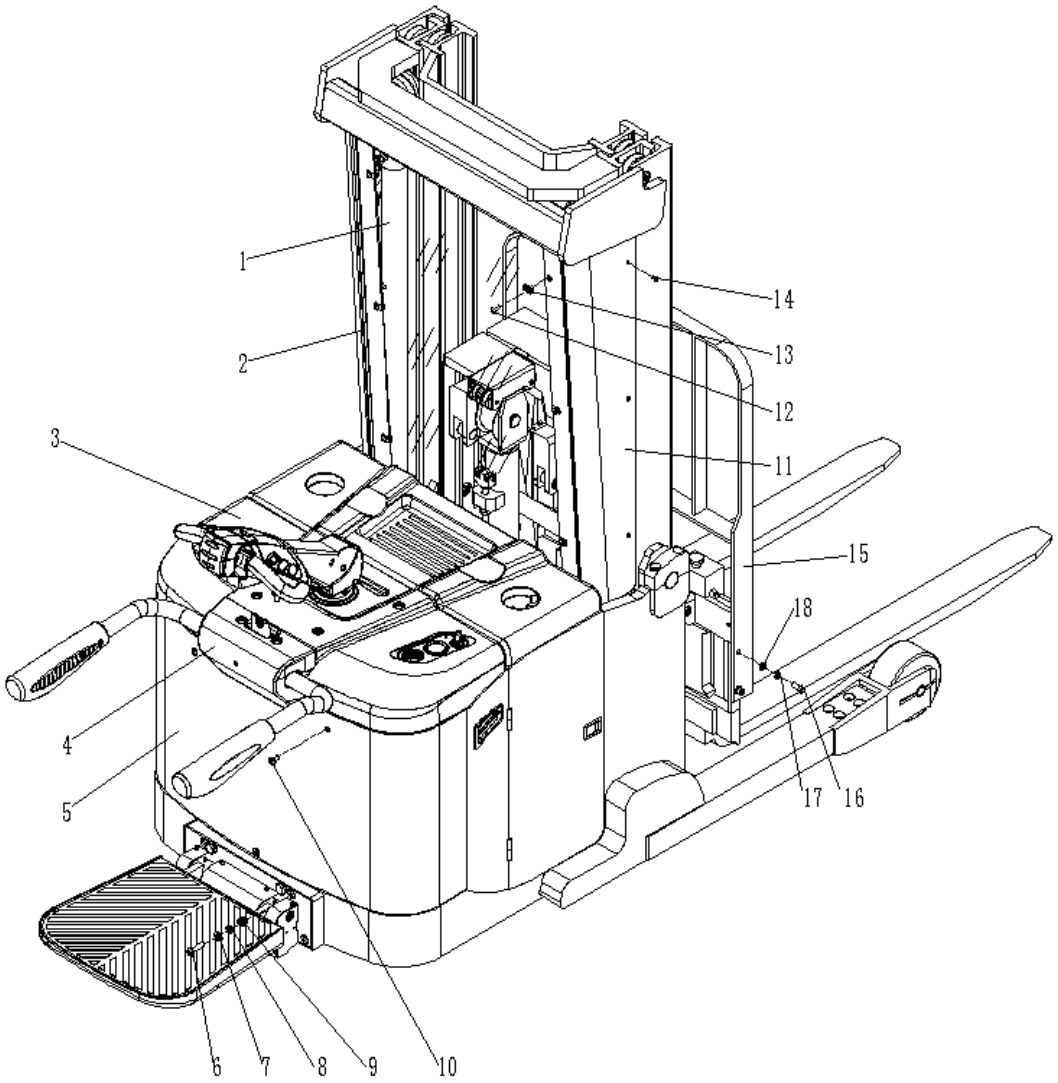

Fig. 4 Appearance（Three-stage-mast truck leg inside width 865）

No.	Art No.	Description	Qty.	Note	Standard
1	9000007983	Protective plate	1	Three-stage-mast 4000	
	9000009581			Three-stage-mast 4600	
	9000009592			Three-stage-mast5 000	
	9000009603			Three-stage-mast5 500	
2	9000007974	Left protective cover	1	Three-stage-mast 4000	
	9000009578			Three-stage-mast 4600	
	9000009589			Three-stage-mast 5000	
	9000009600			Three-stage-mast5 500	
3	9000008009	Top cover	1		
4	9000008063	Protective arm cover	1	With protective arm	
	9000008064	Without protective arm cover	1	Without protective arm	
5	9000007994	Main cover	1		
6	0090000450	Screw	4	M12×45	GB/T70.2=ISO7380
7	0090000048	Washer	4	12	GB/T97.1=ISO7089
8	0000025024	Washer	4	12	GB/T93
9	0000024006	Nut	4	M12	GB/T889.1=ISO7040
10	9000007791	Screw	9	M10×35	
11	9000007985	Right protective cover	1	Three-stage-mast 4000	
	9000009582			Three-stage-mast	

				4600	
	9000009593			Three-stage-mast5000	
	9000009604			Three-stage-mast 5500	
12	0090000448	Screw	6	M8×20	GB/T70.2=ISO7380
13	9000007784	Nut	6	M8	
14	0000023045	Screw	6	M6×12	GB/T70.2=ISO7380
15	9000009779	Load backrest	1		
16	0000023088	Screw	4	M10×25	GB/T70.1=ISO4762
17	0000023006	Washer	4	10	GB/T93
18	0000025002	Washer	4	10	GB/T95

Fig. 5 Appearance（Two-stage-mast truck leg inside width 1270）

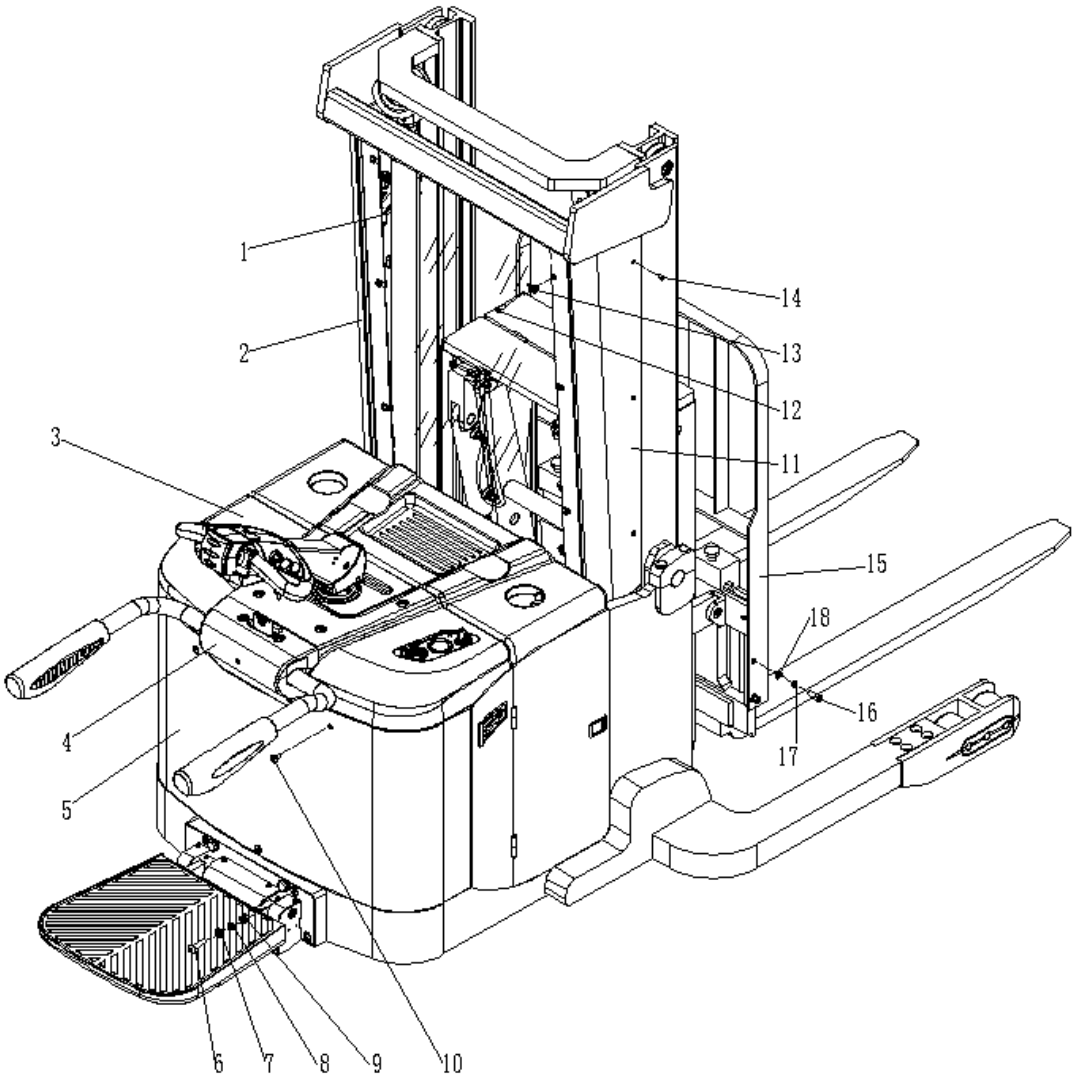

Fig. 5 Appearance（Two-stage-mast truck leg inside width 1270）

No.	Art No.	Description	Qty.	Note	Standard
1	9000007983	Protective plate	1	Two-stage-mast 2900	
	9000009626			Two-stage-mast 3200	
	9000009635			Two-stage-mast 3600	
2	9000007974	Left protective cover	1	Two-stage-mast 2900	
	9000009625			Two-stage-mast 3200	
	9000009634			Two-stage-mast 3600	
3	9000008009	Top cover	1		
4	9000008063	Protective arm cover	1	With protective arm	
	9000008064	Without protective arm cover	1	Without protective arm	
5	9000007994	Main cover	1		
6	0090000450	Screw	4	M12×45	GB/T70.2=ISO7380
7	0090000048	Washer	4	12	GB/T97.1=ISO7089
8	0000025024	Washer	4	12	GB/T93
9	0000024006	Nut	4	M12	GB/T889.1=ISO7040
10	9000007791	Screw	9	M10×35	
11	9000007985	Right protective cover	1	Two-stage-mast 2900	
	9000009627			Two-stage-mast 3200	
	9000009636			Two-stage-mast 3600	
12	0090000448	Screw	6	M8×20	GB/T70.2=ISO7380
13	9000007784	Nut	6	M8	
14	0000023045	Screw	6	M6×12	GB/T70.2=ISO7380

15	9000009779	Load backrest	1		
16	0000023088	Screw	4	M10×25	GB/T70.1=ISO4762
17	0000023006	Washer	4	10	GB/T93
18	0000025002	Washer	4	10	GB/T95

Fig. 6 Appearance（Two-stage-mast truck leg inside width 865）

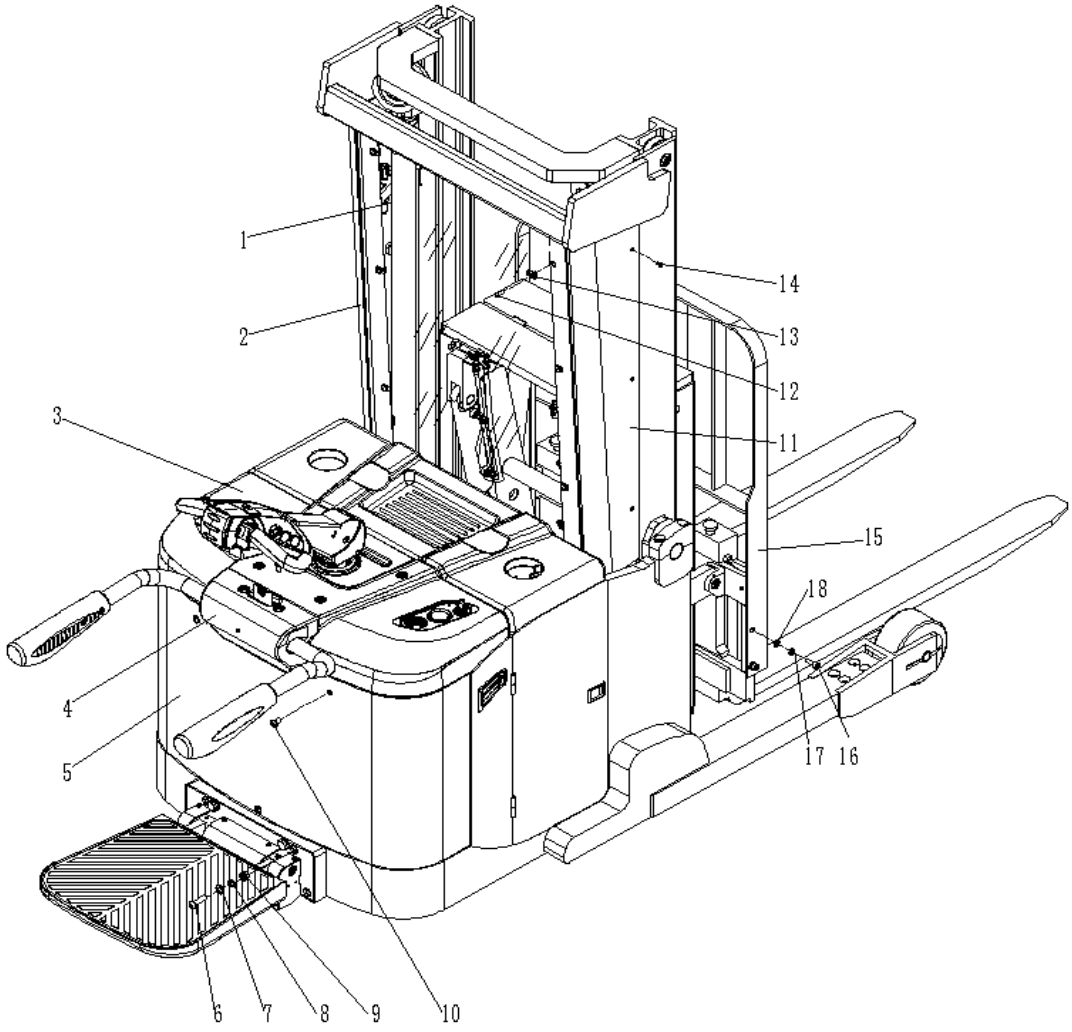

Fig. 6 Appearance（Two-stage-mast truck leg inside width 865）

No.	Art No.	Description	Qty.	Note	
1	9000007983	Protective plate	1	Two-stage-mast 2900	
	9000009626			Two-stage-mast 3200	
	9000009635			Two-stage-mast 3600	
2	9000007974	Left protective cover	1	Two-stage-mast 2900	
	9000009625			Two-stage-mast 3200	
	9000009634			Two-stage-mast 3600	
3	9000008009	Top cover	1		
4	9000008063	Protective arm cover	1	With protective arm	
	9000008064	Without protective arm cover	1	Without protective arm	
5	9000007994	Main cover	1		
6	0090000450	Screw	4	M12×45	GB/T70.2=ISO7380
7	0090000048	Washer	4	12	GB/T97.1=ISO7089
8	0000025024	Washer	4	12	GB/T93
9	0000024006	Nut	4	M12	GB/T889.1=ISO7040
10	9000007791	Screw	9	M10×35	
11	9000007985	Right protective cover	1	Two-stage-mast 2900	
	9000009627			Two-stage-mast 3200	
	9000009636			Two-stage-mast 3600	
12	0090000448	Screw	6	M8×20	GB/T70.2=ISO7380
13	9000007784	Nut	6	M8	
14	0000023045	Screw	6	M6×12	GB/T70.2=ISO7380

15	9000009779	Load backrest	1		
16	0000023088	Screw	4	M10×25	GB/T70.1=ISO4762
17	0000023006	Washer	4	10	GB/T93
18	0000025002	Washer	4	10	GB/T95

Fig. 7 Scissor assembly（Three-stage-mast）

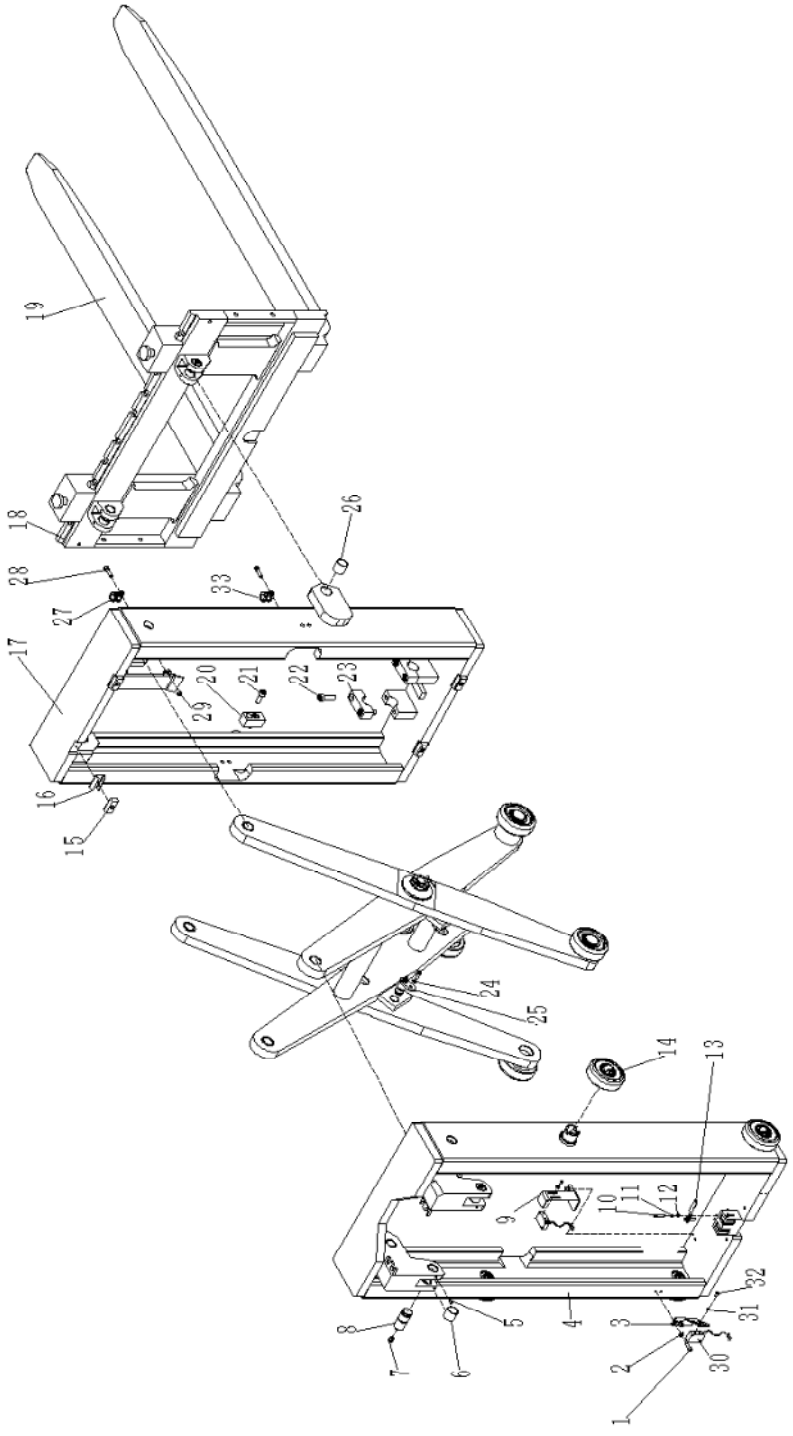

Fig. 7 Scissor Assembly（Three-stage-mast）

No.	Art No.	Description	Qty.	Note	Standard
1	0000023040	Screw	13	M6×16	GB/T70.1=ISO4762
2	0000023055	Washer	6	6	GB/T95
3	9000007949	Proximity switch	1		

4	9000007952	Scissor frame	1		
5	0000023743	Screw	8	M6×10	GB/T79=ISO4028
6	9000007797	Bushing	2	□25×28×22	
7	0000030028	Grease nipple	10	M8×1	JB/T7940.1=ISOB1575
8	9000007950	Short axle	8		
9	9000007948	Proximity switch	1		
10	0000023033	Screw	4	M4×25	GB/T70.1=ISO4762
11	0000025018	Washer	4	4	GB/T93
12	0000025019	Washer	4	4	GB/T95
13	9000007981	Connector seat	2		
14	3500100005	Compound roller	4		
15	9000007947	Cushion	4		
16	9000007957	Cushion cover	4		
17	9000007951	Fork frame	1		
18	9000007946	Fork frame	1		
19	2090500001	Fork assembly	2		
20	9000007954	Block	2		
21	0000023088	Screw	6	M10×25	GB/T70.1=ISO4762
22	0000023029	Screw	4	M10×35	GB/T70.1=ISO4762
23	9000007953	Pressure plate	2		
24	0000025010	Washer	6	6	GB/T93
25	9000007955	Linking axle	2		
26	0000027040	Bushing	2	□25×28×25	
27	9000009945	Pipe clamp	2		
28	0000023044	Screw	2	M8×20	GB/T70.1=ISO4762
29	0000024005	Nut	2	M8	GB/T6170=ISO4032
30	9000008331	Proximity switch	2	NBN8-F1-E2	
31	0000025026	Washer	4	3	GB/T95
32	0090000554	Screw	4	M3×8	GB/T70.1=ISO4762
33	9000008324	Pipe clamp	3		

Fig. 8 Scissor assembly（Two-stage-mast）

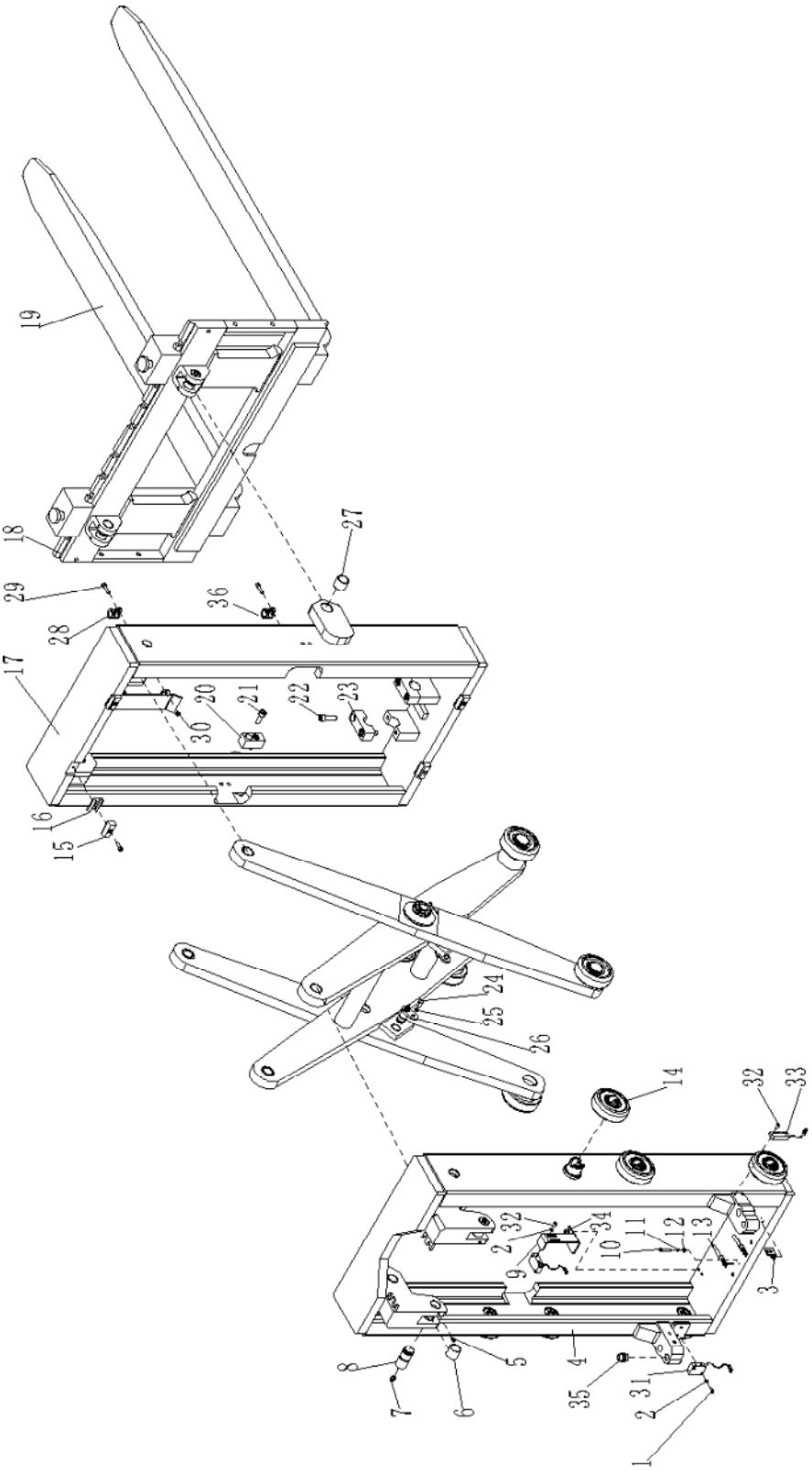

Fig. 8 Scissor Assembly（Two-stage-mast）

No.	Art No.	Description	Qty.	Note	Standard
1	0000023075	Screw	2	M3×20	GB/T70.1=ISO4762
2	0000025026	Washer	4	3	GB/T95
3	1010404005	Fixing plate	1		
4	9000009615	Scissor frame	1		
5	0000023743	Screw	8	M6×10	GB/T79=ISO4028
6	9000007797	Bushing	2	·25×28×22	
7	0000030028	Grease nipple	10	M8×1	JB/T7940.1=ISOB1575
8	9000007950	Short axle	8		
9	9000007948	Proximity switch seat	1		
10	0000023033	Screw	6	M4×25	GB/T70.1=ISO4762
11	0000025018	Washer	6	4	GB/T93
12	0000025019	Washer	6	4	GB/T95
13	9000007981	Connector seat	2		
14	3500100005	Compound Roller	6		
15	9000007947	Cushion	4		
16	9000007957	Cushion cover	4		
17	9000009614	Fork frame	1		
18	9000009613	Fork frame	1		
19	2090500001	Fork assembly	2		
20	9000007954	Block	2		
21	0000023088	Screw	6	M10×25	GB/T70.1=ISO4762
22	0000023029	Screw	4	M10×35	GB/T70.1=ISO4762
23	9000007953	Pressure plate	2		
24	0000023040	Screw	11	M6×16	GB/T70.1=ISO4762
25	0000025010	Washer	4	6	GB/T93
26	9000007955	Linking axle	2		
27	0000027040	Bushing	2	·25×28×25	
28	9000009945	Pipe clamp	2		
29	0000023044	Screw	2	M8×20	GB/T70.1=ISO4762
30	0000024005	Nut	2	M8	GB/T6170=ISO4032
31	9000008331	Proximity switch	2	NBN8-F1-E2	
32	0090000554	Screw	2	M3×8	GB/T70.1=ISO4762
33	9000008332	Magnet switch	1		
34	0000023055	Washer	4	6	GB/T95
35	9000008679	Cable tighten components	1		
36	9000008324	Pipe clamp	3		

Fig. 9 Fork assembly

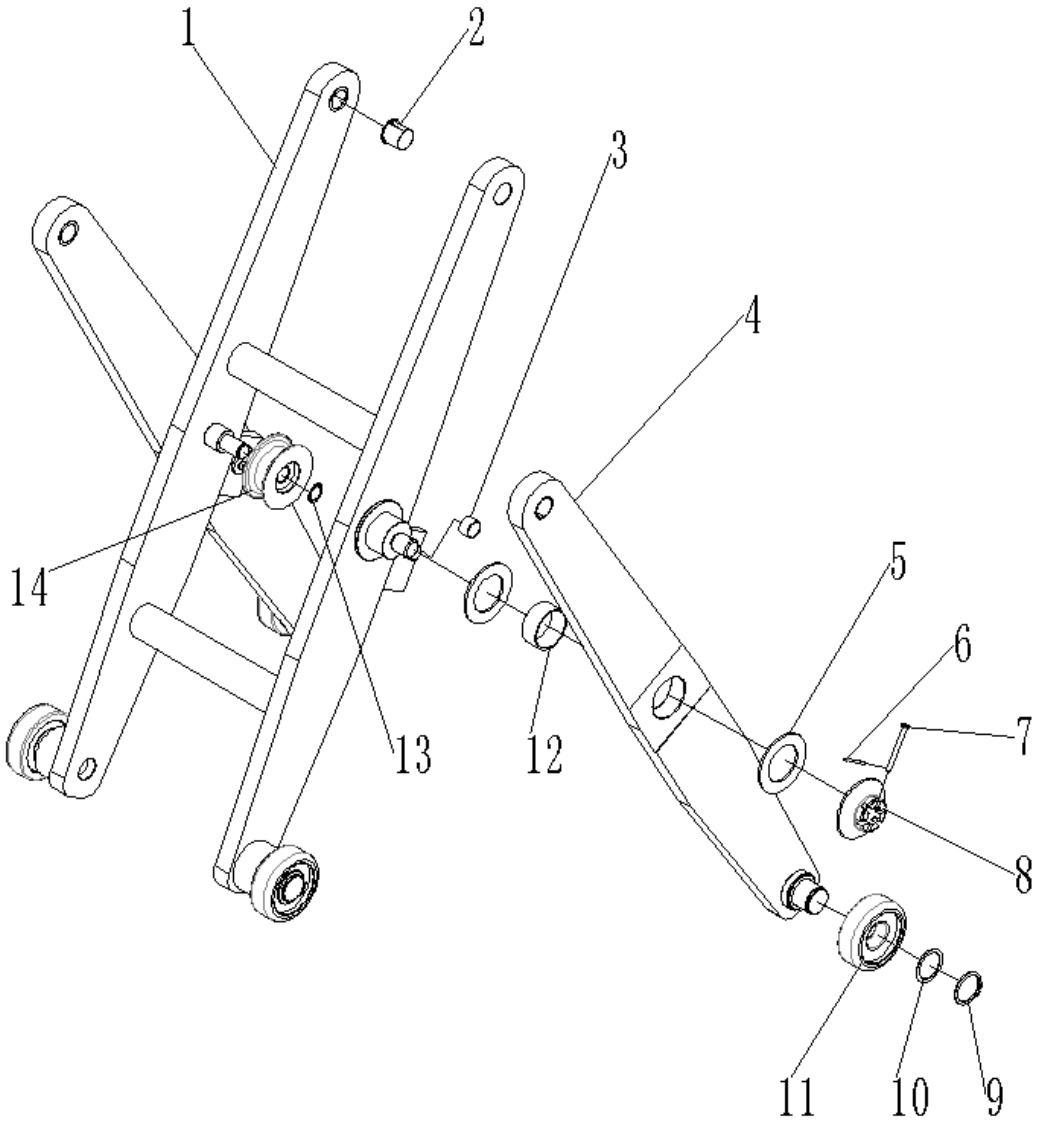

Fig. 9 Fork Assembly

No.	Art No.	Description	Qty.	Note	Standard
1	9000007941	Fork	1	Three-stage-mast	
	9000009612			Two-stage-mast	
2	9000007798	Bushing	4	□25×28×25.5	
3	2400527001	Bushing	2	□20×23×14	
4	9000007942	Fork	2		
5	9000007943	Washer	4		
6	0000028066	Split pin	2	2×12	GB/T91=ISO1234
7	0090000357	Short axle	2	6×50	GB/T882=ISO2341
8	9000007944	Nut	2		
9	0000026035	Circlip	4	35	GB/T894.1
10	9000007945	Washer	8		
11	9000011906	Roller	4		
12	9000007796	Bushing	2	□50×55×23	
13	0000026003	Circlip	1	20	GB/T894.1
14	9000007956	Pulley	1		

Fig. 10 Load roller assembly（Tandem）

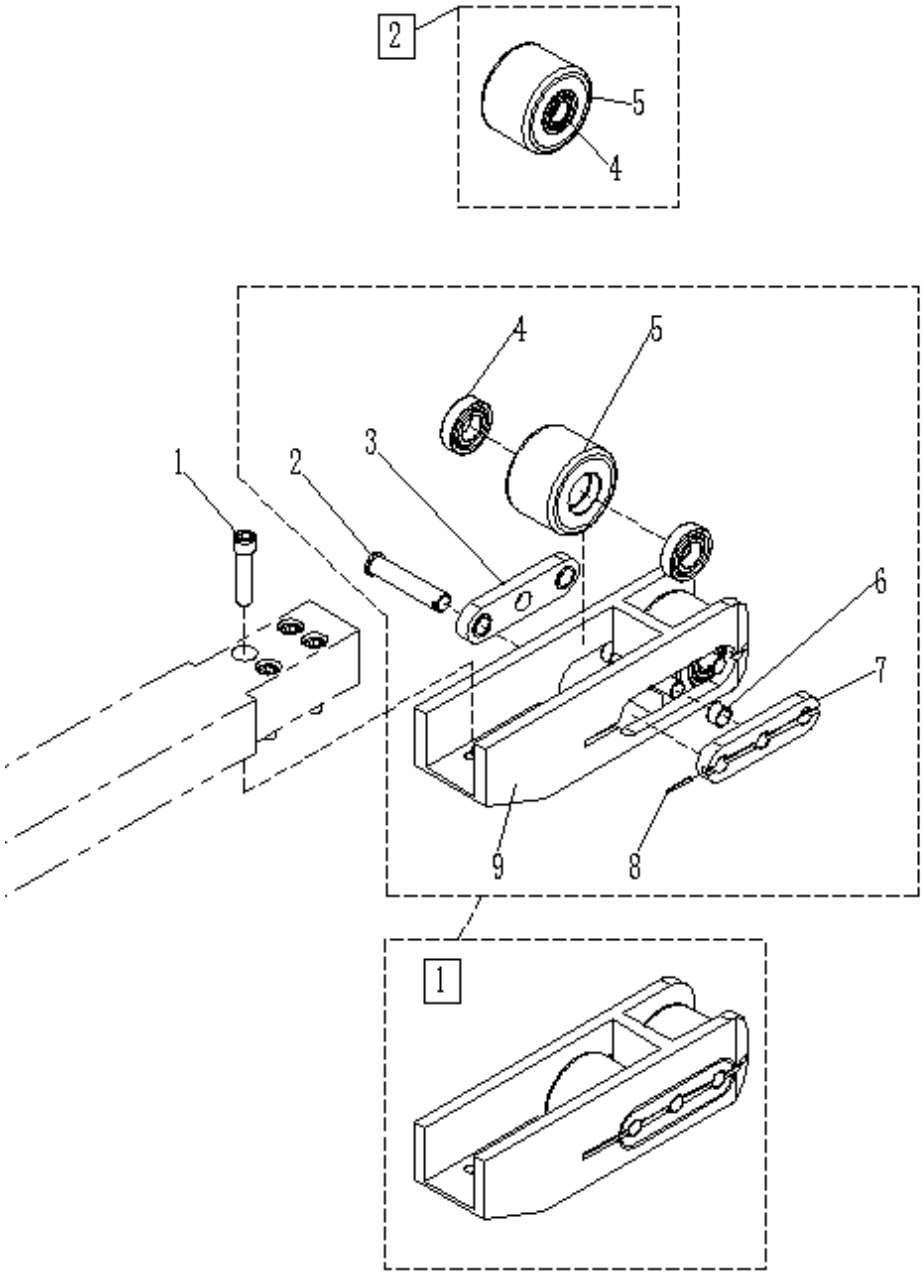

Fig. 10 Load Roller Assembly（Tandem）

No.	Art No.	Description	Qty.	Note	Standard
1	0090000322	Screw	8	M16×70	GB/T70.1=ISO4762
2	9000008038	Wheel axle	4	Tandem	
3	9000008041	Linking plate	2	Tandem	
4	0000027001	Bearing	8	6204	GB/T276
5	0000037024	Load roller	4	·102×70	
6	2400527001	Bushing	4	·20×23×14	
7	9000008039	Linking plate	2	Tandem	
8	0000028163	Dowel pin	4	4×35	GB/T879.1=ISO8752
9	9000008040	Wheel frame	2	Tandem	
□,1	9000009775	Load roller assembly	2		
□,2	9000003645	Load roller assembly	4	Tandem	

Fig. 11 Load roller assembly（Single）

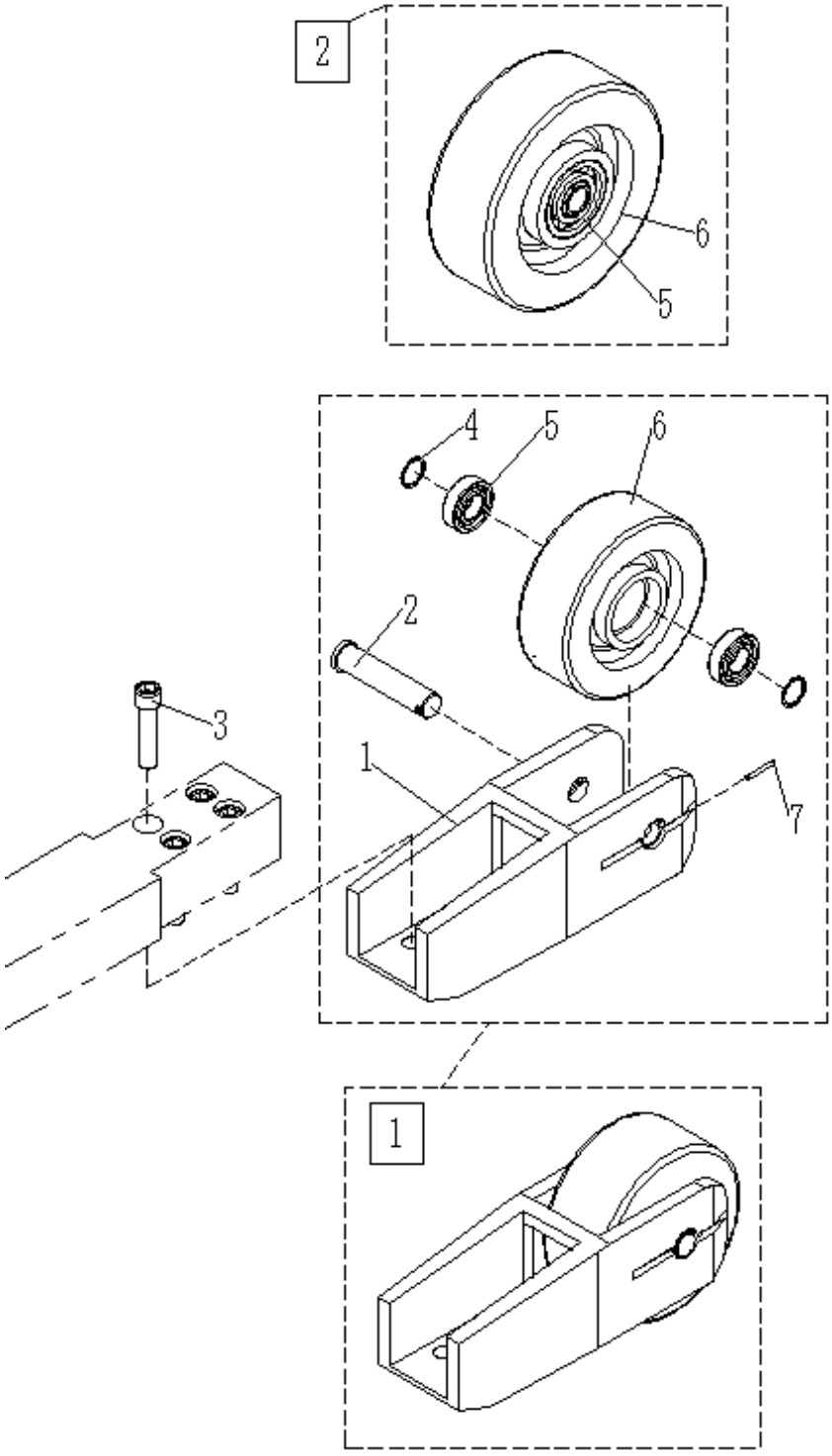

Fig. 11 Load Roller Assembly（Single）

No.	Art No.	Description	Qty.	Note	Standard
1	9000009609	Wheel frame	2	Single	
2	9000009608	Wheel axle	2	Single	
3	0090000322	Screw	8	M16×70	GB/T70.1=ISO4762
4	9000009873	Washer	4		
5	0090000546	Bearing	4	6307	GB/T276
6	9000008225	Load roller	2	230X80	
7	0090000545	Dowel pin	2	5x65	GB/T879.1=ISO8752
□,1	9000009607	Load roller assembly	2		
□,2	9000003986	Load roller assembly	2	Single	

Fig. 12 Mast assembly（Three-stage-mast）

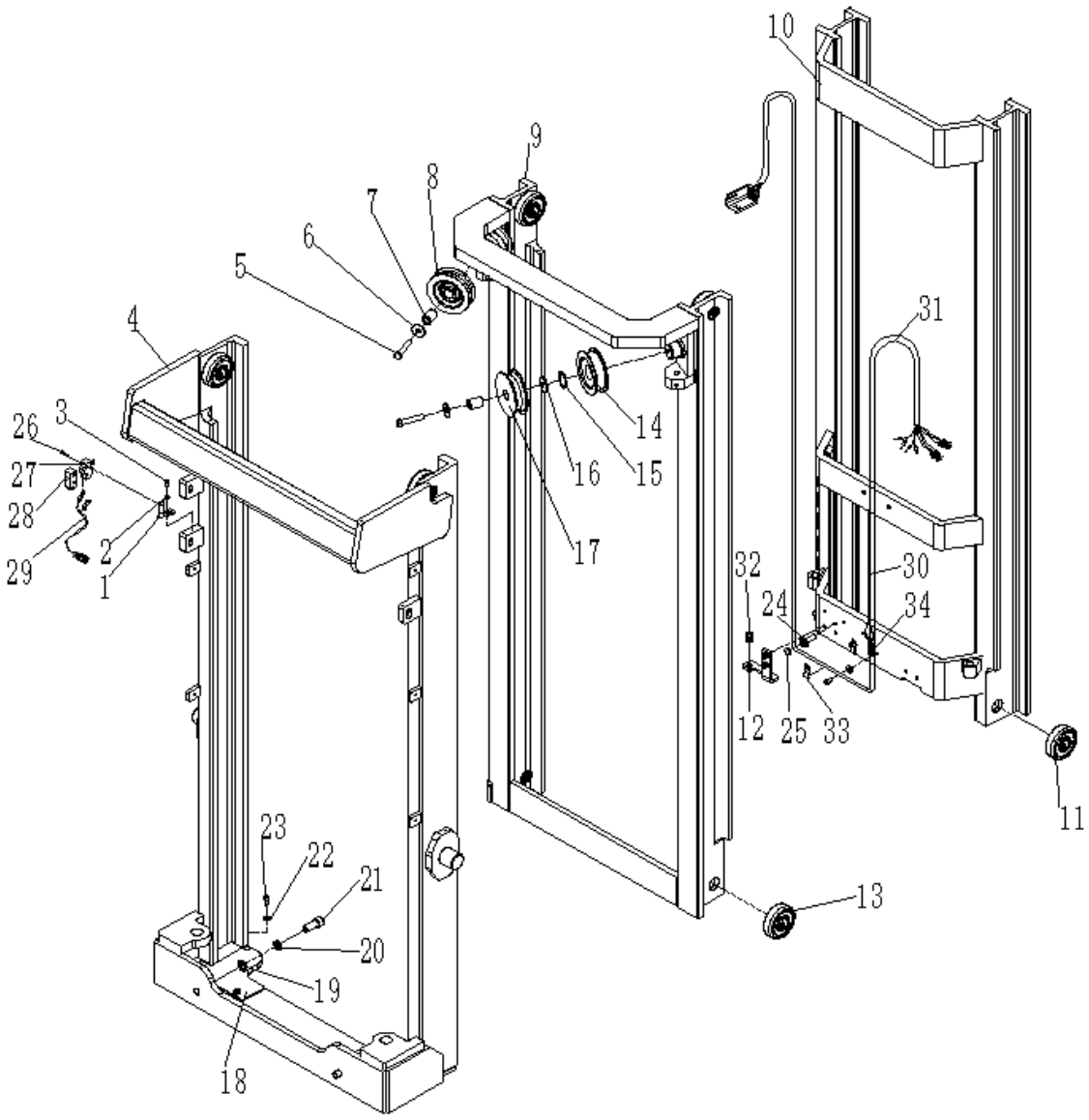

Fig. 12 Mast Assembly（Three-stage-mast）

No.	Art No.	Description	Qty.	Note	Standard
1	9000007966	Assembly seat	1		
2	0000023055	Washer	1	6	GB/T95
3	0000023040	Screw	1	M6×16	GB/T70.1=ISO4762
4	9000007963	Mast	1	Three-stage-mast 4000	
	9000009577			Three-stage-mast 4600	
	9000009588			Three-stage-mast 5000	
	9000009599			Three-stage-mast5500	
5	0090000317	Bolt	2	M12×65	GB/T5783=ISO4017
6	0000025025	Washer	2	12	GB/T96.1=ISO7093-1
7	9000007965	Bushing	2		
8	9000007964	Pulley	1		
9	9000007980	Mast	1	Three-stage-mast 4000	
	9000009579			Three-stage-mast 4600	
	9000009590			Three-stage-mast5000	
	9000009601			Three-stage-mast5500	
10	9000007982	Mast	1	Three-stage-mast 4000	
	9000009580			Three-stage-mast 4600	
	9000009591			Three-stage-mast5000	
	9000009602			Three-stage-mast 5500	
11	3500100005	Compound roller	4		
12	9000007978	Cable seat	1		
13	3500100004	Compound roller	4		
14	2060610001	Chain wheel	2		
15	0000026014	Circlip	2	40	GB/T894.1
16	9000007987	Washer	2		
17	9000007968	Pulley	1		
18	9000007979	Cushion	2		
19	0000025029	Washer	2	16	GB/T95
20	0000025059	Washer	2	16	GB/T93
21	0090000147	Screw	2	M16×40	GB/T70.1=ISO4762

22	0000025011	Washer	10	8	GB/T95
23	0000023067	Screw	10	M8×16	GB/T70.1=ISO4762
24	9000008079	Magnet steel seat	1		
25	2000435002	Magnet steel	1		
26	0000023033	Screw	2	M4×25	GB/T70.1=ISO4762
27	2040634001	Proximity switch	1		
28	2040603002	Cover	1		
29	9000008414	Limit control wiring harness	1		
30	9000008681	Cable bushing	1		

Fig. 12 Mast components（Three-stage-mast）

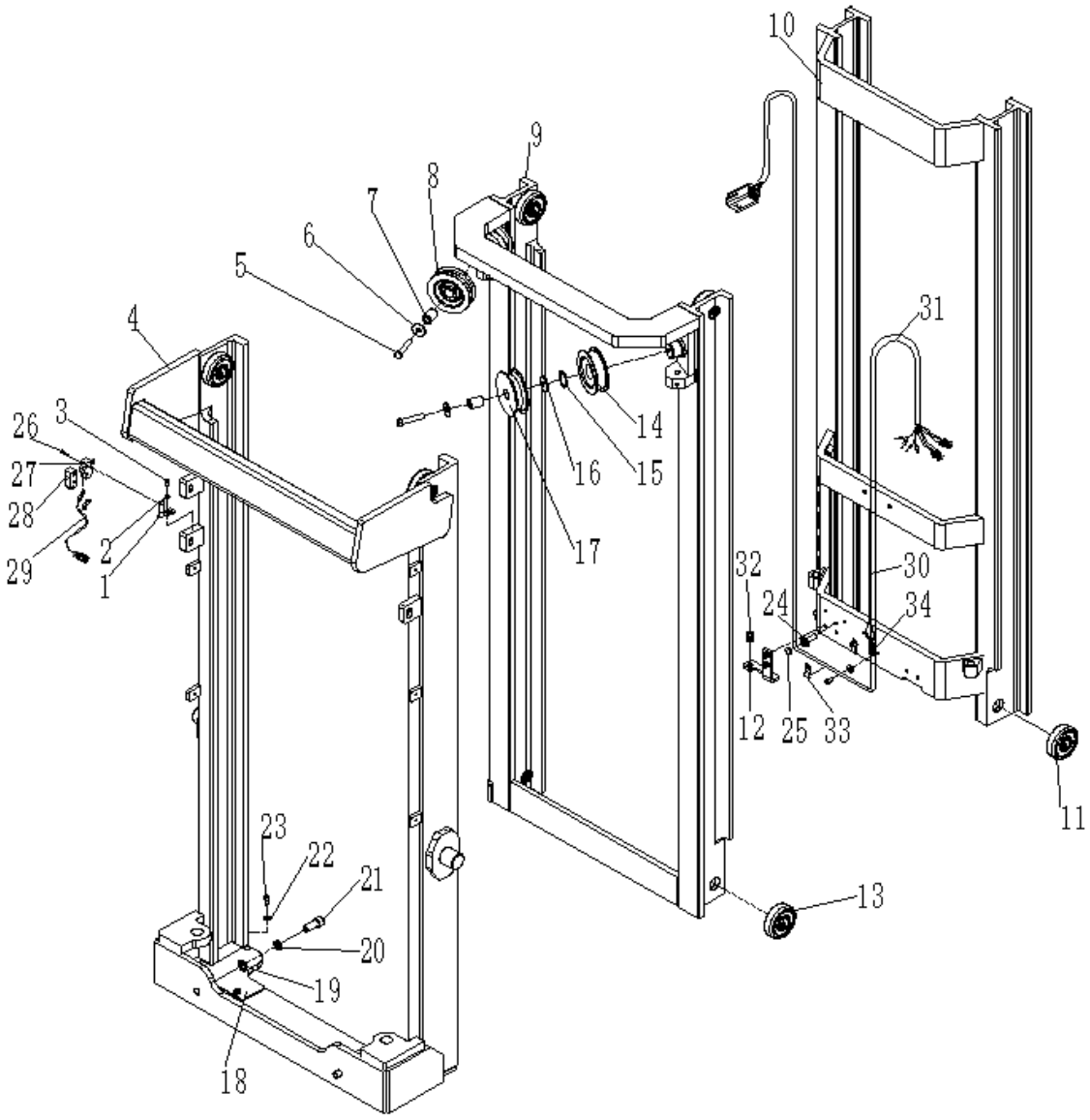

Fig. 12 Mast Assembly（Three-stage-mast）

No.	Art No.	Description	Qty.	Note
31	9000008420	Solenoid valve control wiring harness	1	
32	9000008679	Cable tighten assembly	1	
33	9000009794	Cable clamp	2	
34	9000009836	Spring	1	

Fig. 13 Mast assembly（Two-stage-mast）

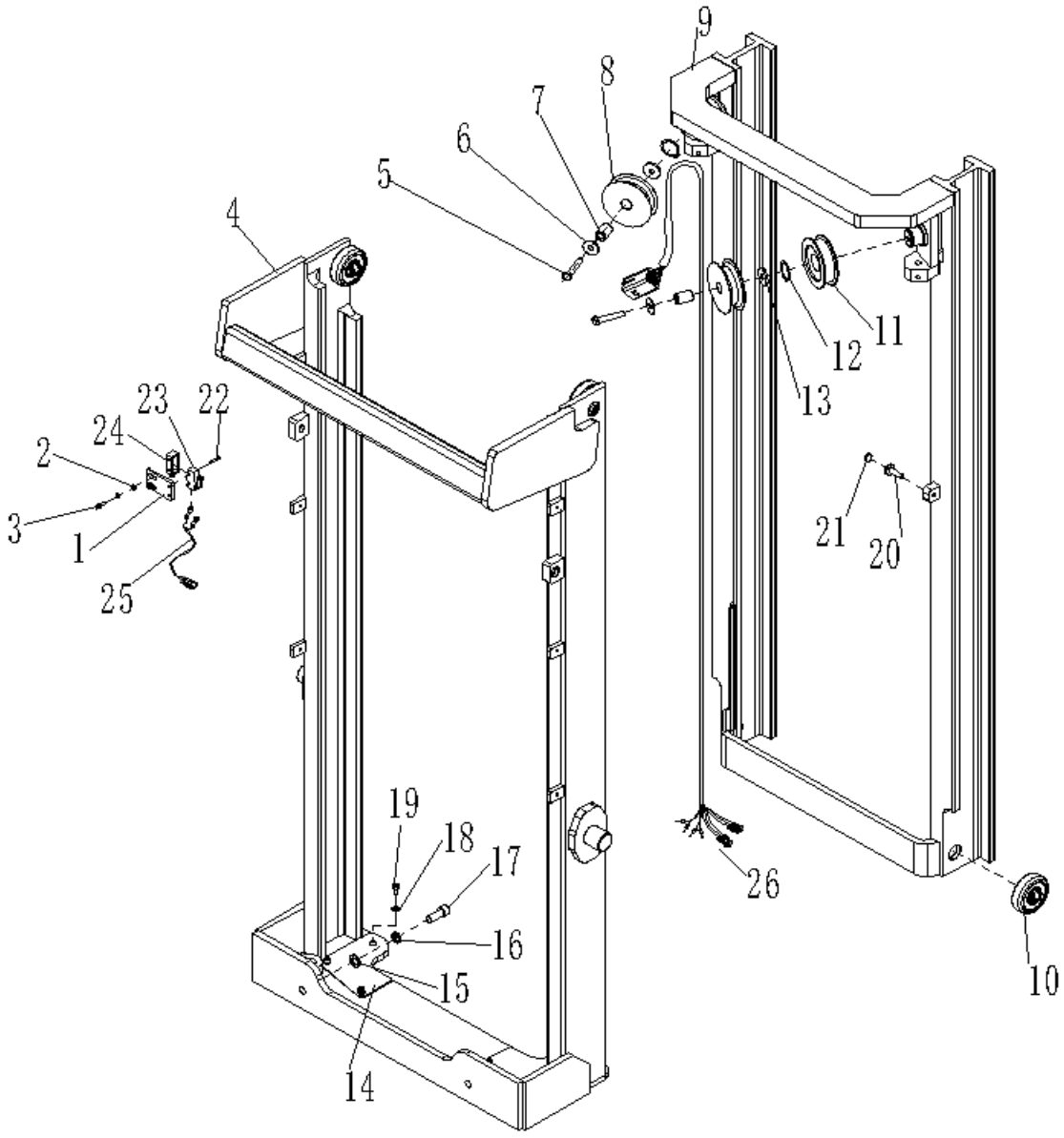

Fig. 13 Mast Assembly（Two-stage-mast）

No.	Art No.	Description	Qty.	Note	Standard
1	9000009622	Assembly seat	1		
2	0000023055	Washer	2	6	GB/T95
3	0000023040	Screw	2	M6x16	GB/T70.1=ISO4762
4	9000009620	Mast	1	Two-stage-mast 2900	
	9000009632			Two-stage-mast 3200	
	9000009641			Two-stage-mast 3600	
5	0090000317	Screw	2	M12×65	GB/T5783=ISO4017
6	0000025025	Washer	2	12	GB/T96.1=ISO7093-1
7	9000007965	Bushing	2		
8	9000007968	Pulley	2		
9	9000009621	Mast	1	Two-stage-mast 2900	
	9000009624			Two-stage-mast 3200	
	9000009633			Two-stage-mast 3600	
10	3500100004	Compound roller	4		
11	2060610001	Chain wheel	2		
12	0000026014	Circlip	2	40	GB/T894.1
13	9000007987	Washer	2		
14	9000009623	Cushion	2		
15	0000025029	Washer	2	16	GB/T95
16	0000025059	Washer	2	16	GB/T93
17	0090000147	Screw	2	M16×40	
18	0000025011	Washer	6	8	
19	0000023067	Screw	6	M8×16	GB/T70.1=ISO4762
20	9000008079	Magnet steel seat	1		
21	2000435002	Magnet steel	1		
22	0000023033	Screw	2	M4x25	GB/T70.1=ISO4762

23	2040634001	Proximity switch	1		
24	2040603002	Cover	1		
25	9000008414	Limit control wiring harness	1		
26	9000009780	Solenoid valve control wiring harness	1		

Fig. 14 Cover structure（Three-stage-mast）

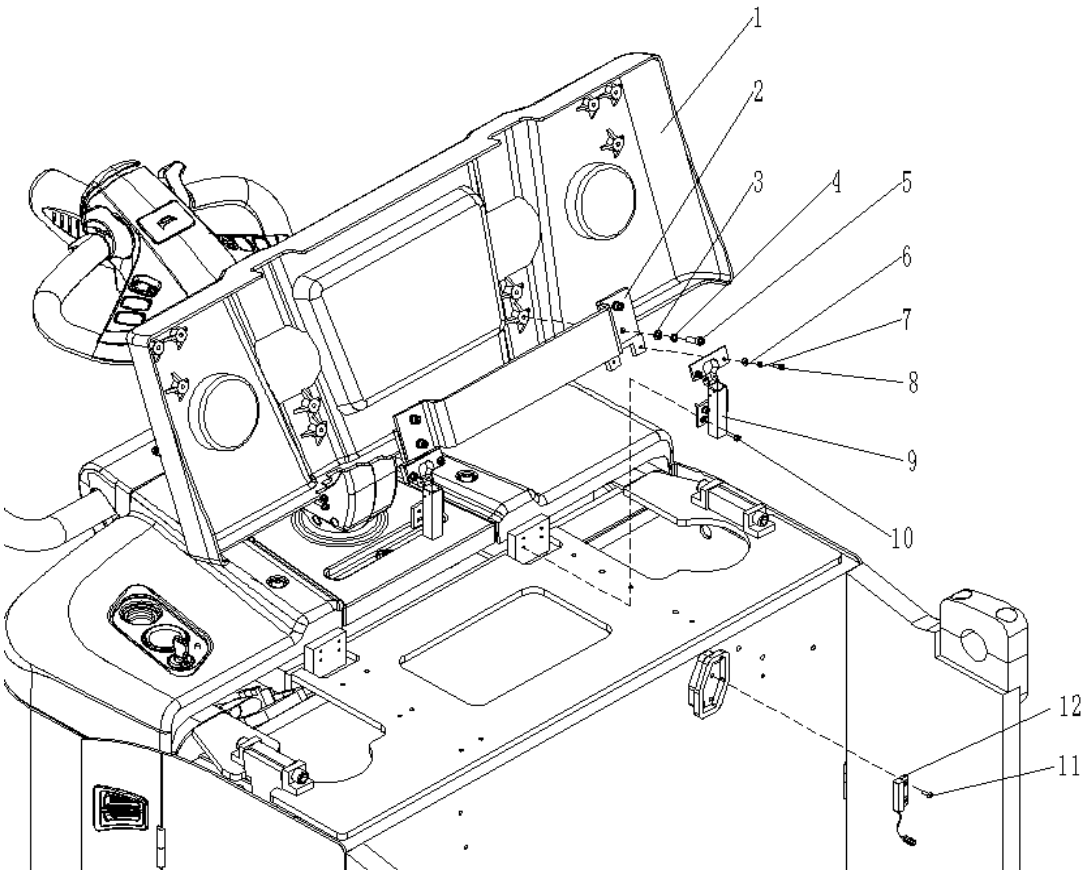

Fig. 14 Cover Structure（Three-stage-mast）

No.	Art No.	Description	Qty.	Note	Standard
1	9000008008	Battery cover	1		
2	9000007988	Connecting frame	1		
3	0000023055	Washer	4	6	GB/T95
4	0000025010	Washer	4	6	GB/T93
5	0000023020	Screw	4	M6×20	GB/T70.1=ISO4762
6	0000025019	Washer	12	4	GB/T95
7	0000025018	Washer	12	4	GB/T93
8	0000023056	Screw	4	M4×12	GB/T70.1=ISO4762
9	9000007804	Hinge	2		
10	0000023853	Screw	8	M4×16	GB/T70.1=ISO4762
11	0090000554	Screw	2	M3×8	GB/T70.1=ISO4762
12	9000008332	Magnet switch	1		

Fig. 15 Cover structure（Two-stage-mast）

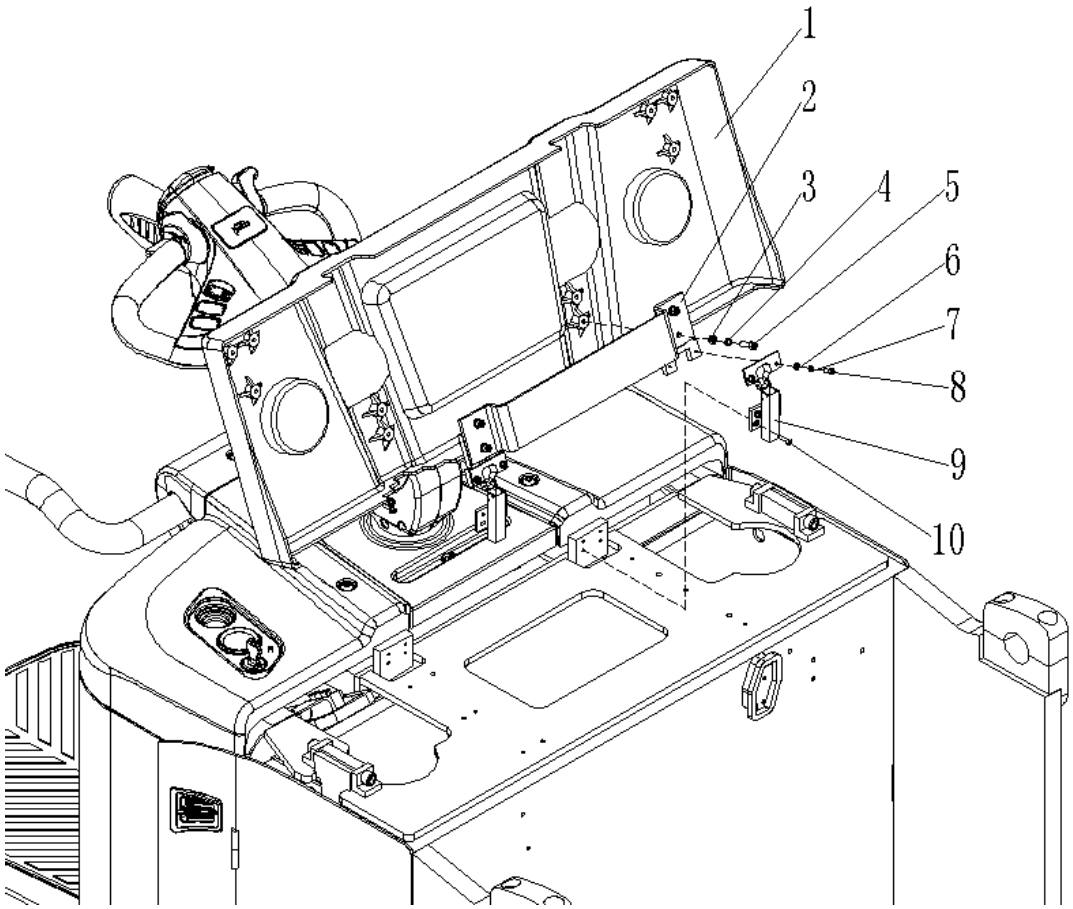

Fig. 15 Cover Structure（Two-stage-mast）

No.	Art No.	Description	Qty.	Note	Standard
1	9000008008	Battery cover	1		
2	9000007988	Connecting frame	1		
3	0000023055	Washer	4	6	GB/T95
4	0000025010	Washer	4	6	GB/T93
5	0000023020	Screw	4	M6×20	GB/T70.1=ISO4762
6	0000025019	Washer	12	4	GB/T95
7	0000025018	Washer	12	4	GB/T93
8	0000023056	Screw	4	M4×12	GB/T70.1=ISO4762
9	9000007804	Hinge	2		
10	0000023853	Screw	8	M4×16	GB/T70.1=ISO4762

Fig. 16 Truck body

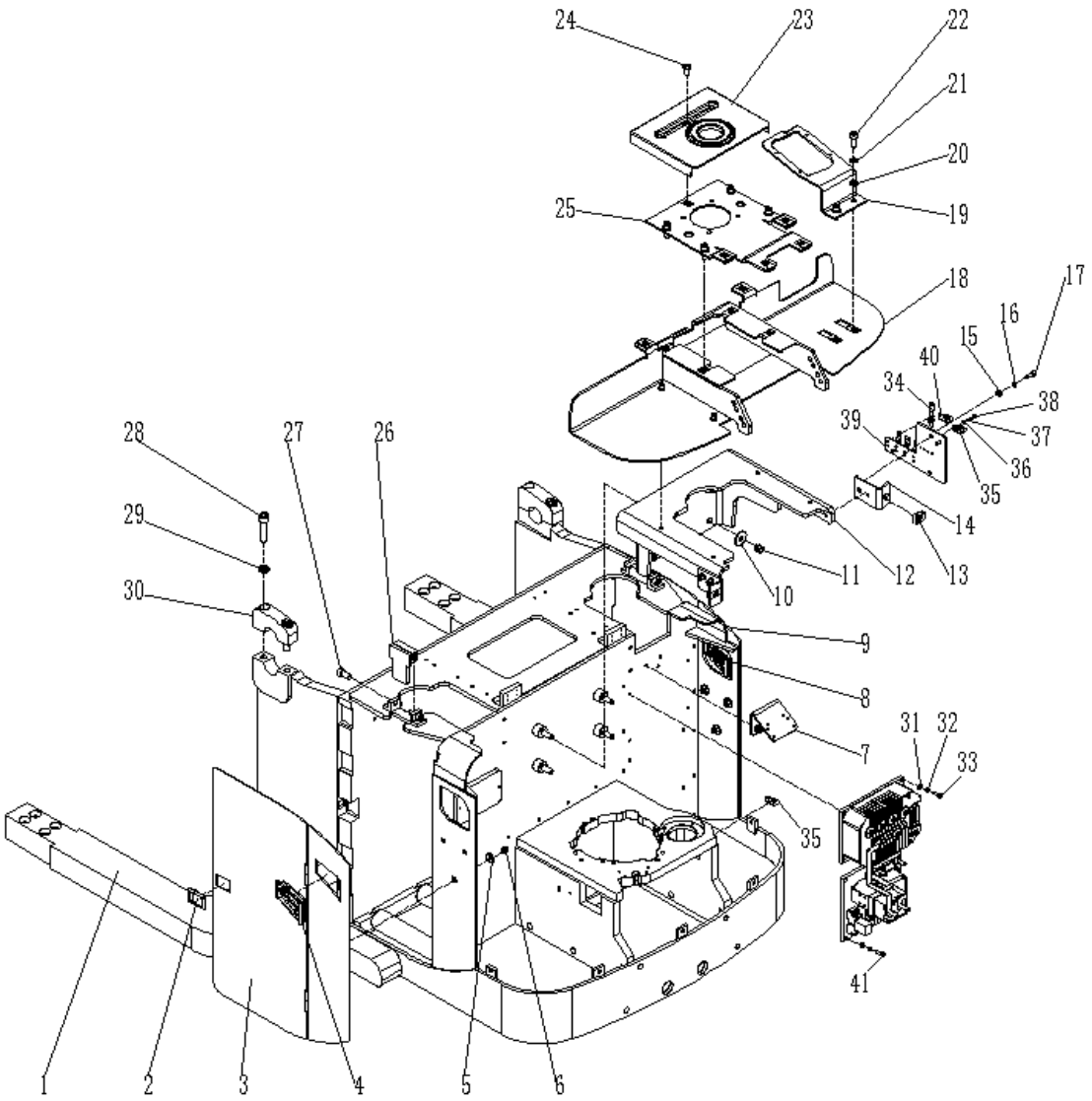

Fig. 16 Truck Body

No.	Art No.	Description	Qty.	Note	Standard
1	9000007992	Truck body	1	Truck leg inner width 1270	
	9000009606			Truck leg inner width 865	
2	9000007807	Lock	2		
3	9000008004	Left door assembly	1		
4	9000007920	Left vents assembly	1		
5	0000025136	Washer	6	8	GB/T96.1=ISO7093-1
6	0000024003	Nut	6	M8	GB/T889.1=ISO7040
7	9000008001	Linking plate	1		
8	9000007923	Right vents assembly	1		
9	9000008005	Right door assembly	1		
10	0000025025	Washer	4	12	GB/T96.1=ISO7093-1
11	0000024006	Nut	4	M12	GB/T889.1=ISO7040
12	9000008000	Support linking seat	1		
13	9000007783	Nut	15	M10	
14	9000007999	Main cover linking seat	2		
15	0000025011	Washer	10	8	GB/T95
16	0000025001	Washer	10	8	GB/T93
17	0000023047	Screw	4	M8×25	GB/T70.1=ISO4762
18	9000007997	Upper cover linking frame	1		
19	9000007998	Indicator plate	1		
20	0000025002	Washer	10	10	GB/T95
21	0000023006	Washer	10	10	GB/T95
22	0000023158	Screw	10	M10×30	GB/T70.1=ISO4762

23	9000007995	Middle cover	1		
24	9000007791	Screw	1	M10×35	
25	9000009999	Handle support plate assembly	1		
26	9000008006	Battery baffle	2		
27	9000008007	Battery baffle rotating axle	4		
28	0000023598	Screw	4	M16×60	GB/T70.1=ISO4762
29	0000025059	Washer	4	16	GB/T93
30	9000008003	Mast axle pressing plate	2		

Fig. 16 Truck body

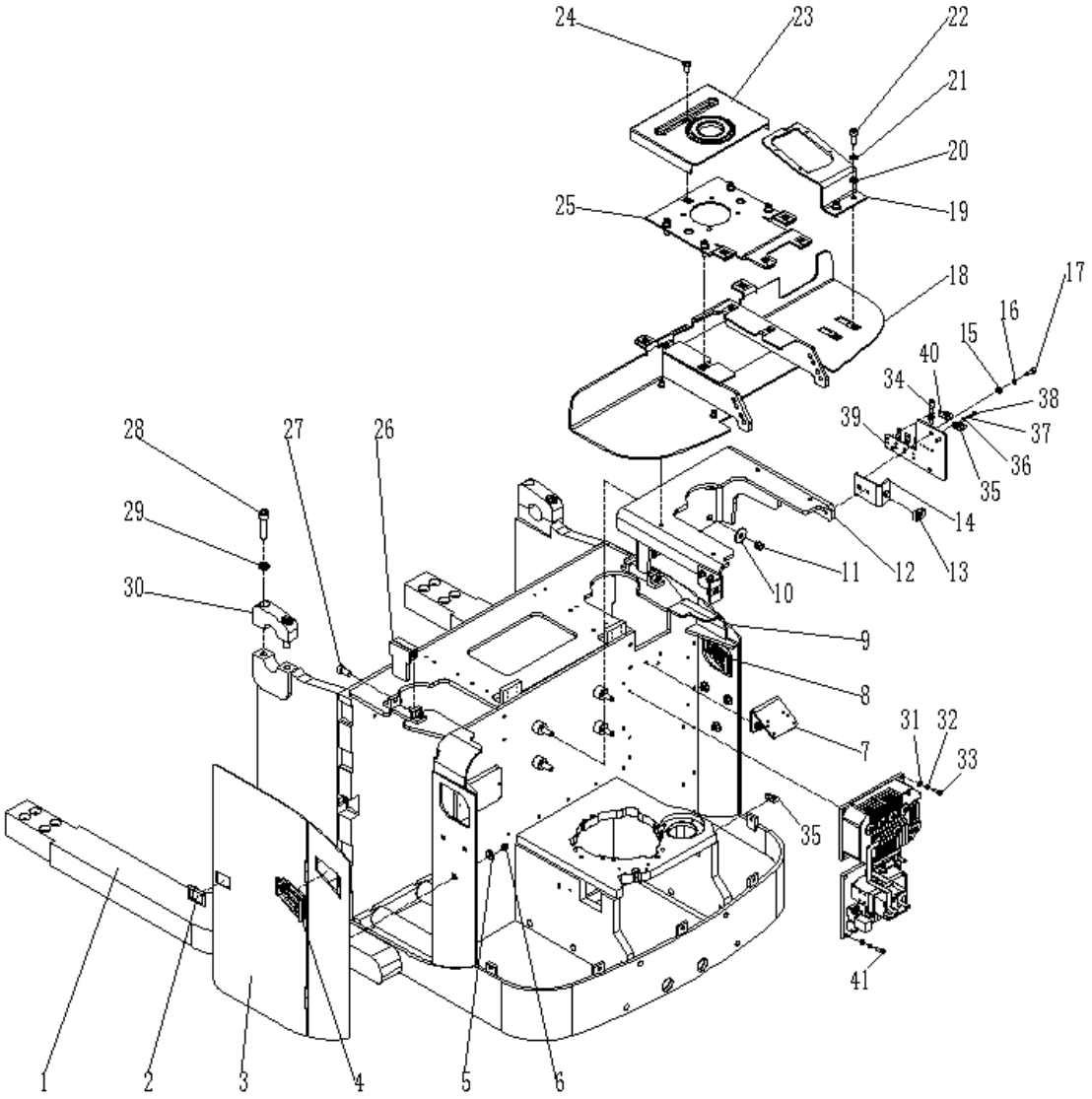

Fig. 16 Truck Body

No.	Art No.	Description	Qty.	Note	Standard
31	0000023055	Washer	4	6	GB/T95
32	0000025010	Washer	4	6	GB/T93
33	0000023020	Screw	4	M6×20	GB/T70.1=ISO4762
34	1000204002	Connector seat	4		
35	9000008882	Fixing frame	2		
36	0000025019	Washer	12	4	GB/T95
37	0000025018	Washer	12	4	GB/T93
38	0000023073	Screw	12	M4×10	GB/T70.1=ISO4762
39	9000008424	Fixing plate	1		
40	1010404005	Fixing frame	1		
41	0000023044	Screw	6	M8×20	GB/T70.1=ISO4762

Fig. 17 Roller assembly

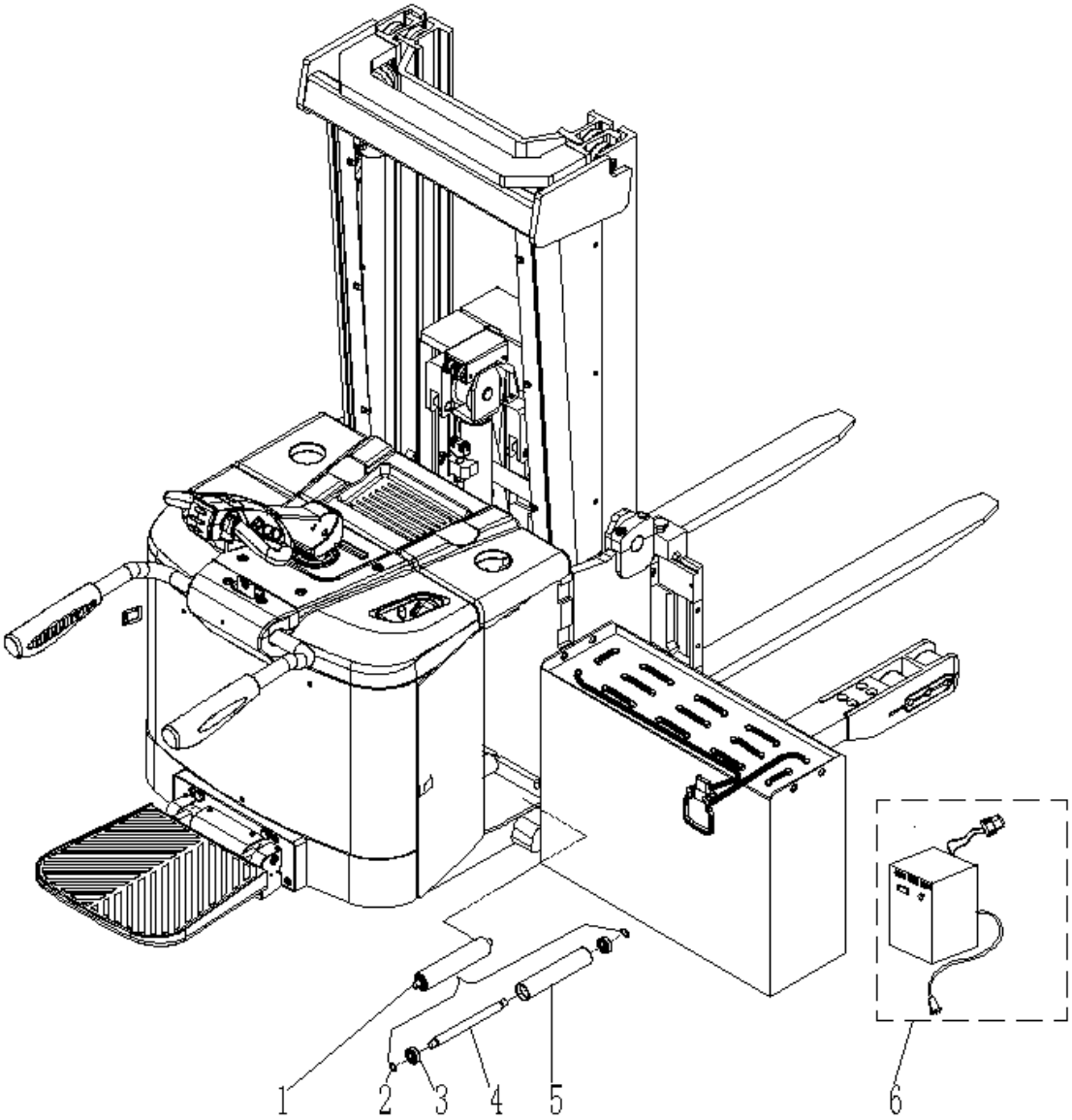

Fig. 17 Roller Assembly

No.	Art No.	Description	Qty.	Note	Standard
1	9000007989	Roller	6		
2	0000026004	Circlip	12	15	GB/T894.1
3	0000027060	Bearing	12	6202	GB/T276
4	9000007990	Axle	6		
5	9000007991	Barrel	6		
6	9000010013	Charger 24V/55A(For USA)	1	400Ahbattery	
	9000010008	Charger 24V/55A(Asia in Chinese)			
	9000010009	Charger 24V/55A(Asia in English)			
	9000010010	Charger 24V/55A(For EU)			
	9000010011	Charger 24V/55A(For AUS)			
	9000010012	Charger 24V/55A(For UK)			
	9000010248	Charger 24V/65A(For USA)	1	480Ahbattery	
	9000010243	Charger 24V/65A(Asia in Chinese)			
	9000010244	Charger 24V/65A(Asia in English)			
	9000010245	Charger 24V/65A(For EU)			
	9000010246	Charger 24V/65A(For AUS)			
	9000010247	Charger 24V/65A(For UK)			

Fig. 18 Drive system

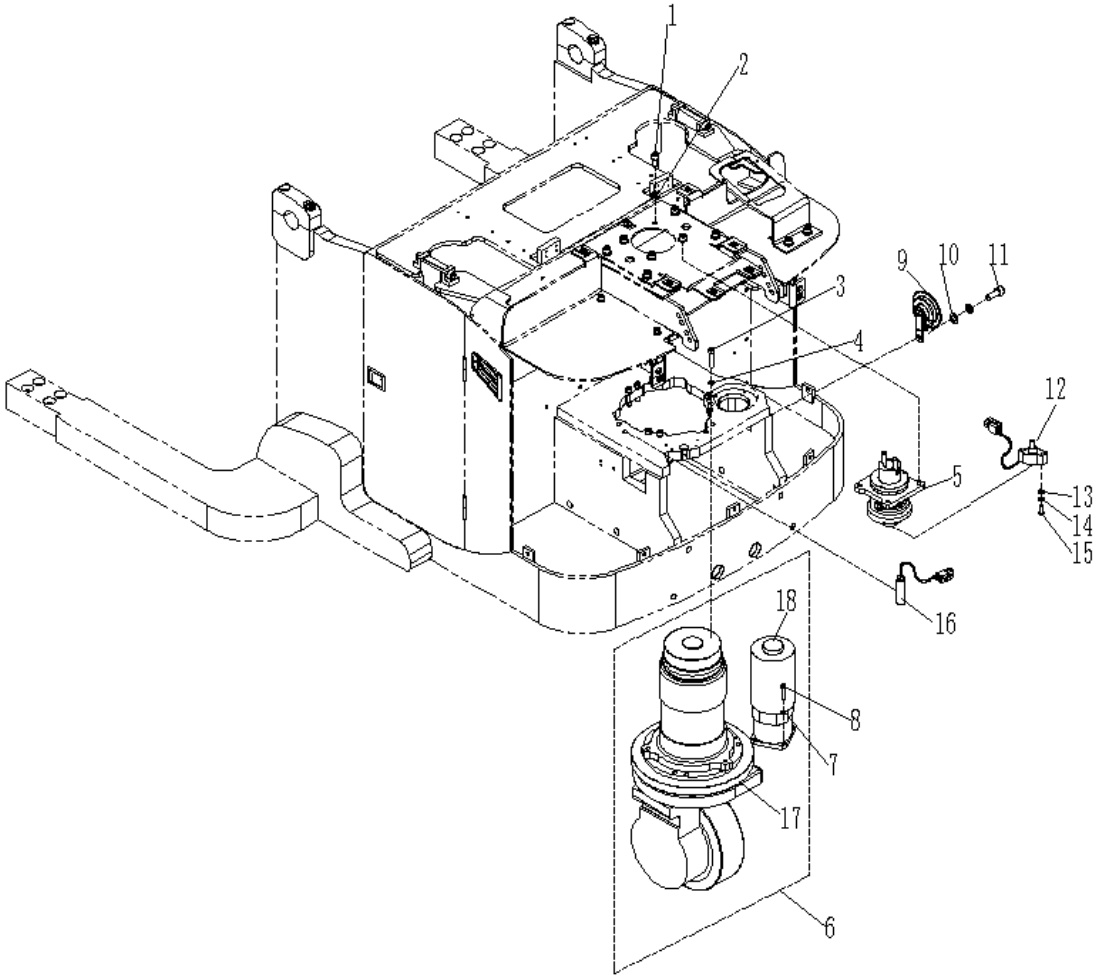

Fig. 18 Drive System

No.	Art No.	Description	Qty.	Note	Standard
1	0000023034	Screw	4	M10×20	GB/T70.1=ISO4762
2	0000025002	Washer	4	10	GB/T95
3	0000023077	Screw	6	M8×40	GB/T70.1=ISO4762
4	0000025001	Washer	6	8	GB/T93
5	9000008734	Electrical steering assembly	1		
6	9000010300	AC Drive DC Steering	1		
7	0000025010	Washer	4	6	GB/T93
8	0000023020	Screw	4	M6×20	GB/T70.1=ISO4762
9	1000434015	Horn	1	DC24V	
10	0000025011	Washer	1	8	GB/T95
11	0000023089	Screw	1	M8×12	GB/T70.1=ISO4762
12	9000010209	Sensor	1	PSC360-F2AA-C0096-ERA200-05E	
13	0000025019	Washer	2	4	GB/T95
14	0000025018	Washer	2	4	GB/T93
15	0000023050	Screw	2	M4x22	GB/T818=ISO7045
16	9000008644	Proximity switch	1	NBB4-12GM50-E0	
17	9000012077	Driving unit	1		
18	9000012078	Steering unit	1		

Fig.19 Drive unit（28ELA-AC-1.6KW）

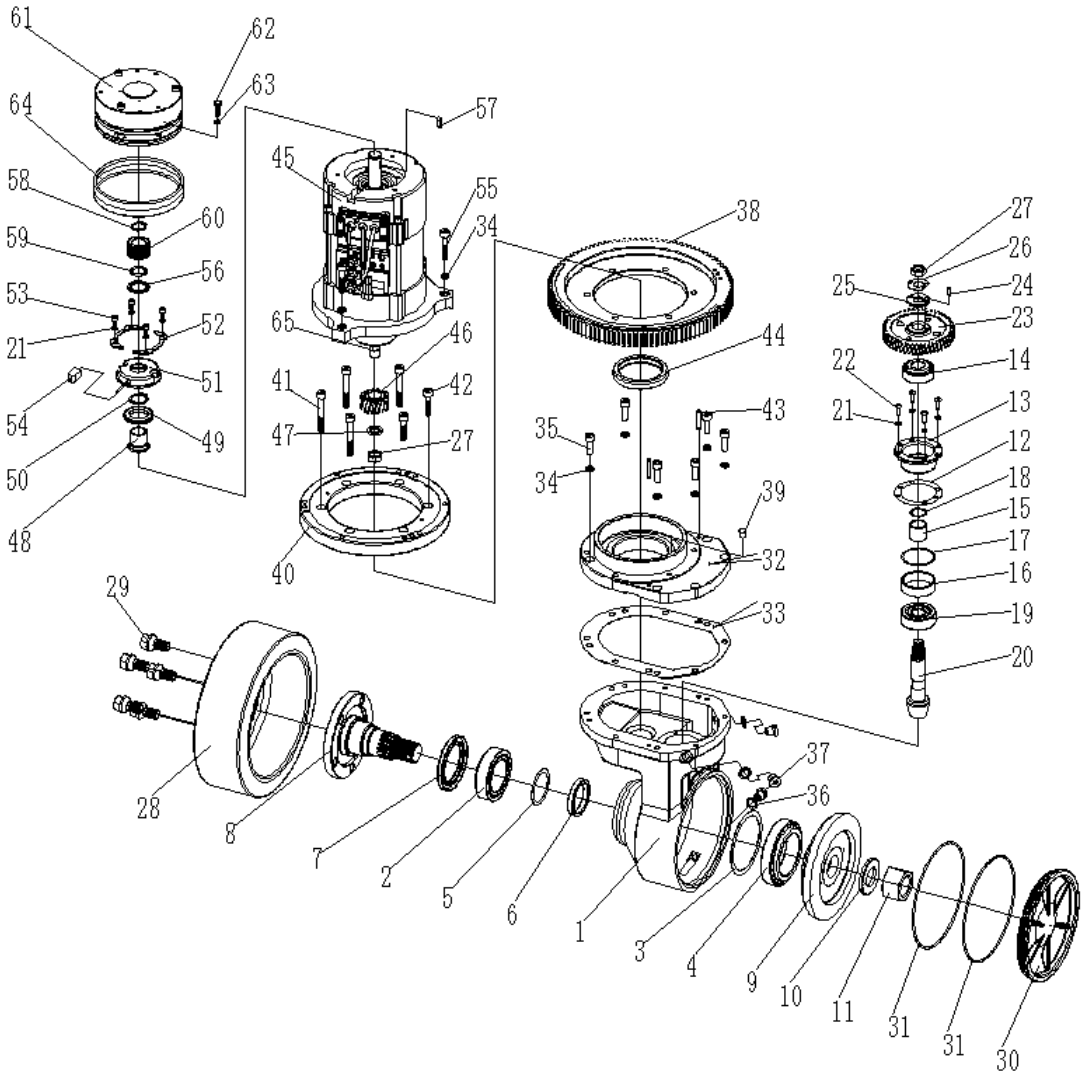

Fig. 19 Drive Unit（28ELA-AC-1.6KW）

No.	Art No.	Description	Qty.	Note	Standard
1	9000009730	Gear box	1		
2	0090000519	Bearing	1	33010	GB/T297
3	9000009731	Washer	1		
4	0090000145	Bearing	1	32013	GB/T297
5	9000009732	Washer	1		
6	9000009733	Bushing	1		
7	0090000520	Oil seal	1	60×85×8	GB/T9877
8	9000009734	Drive wheel	1		
9	9000009735	Gear	1		
10	9000009736	Lock washer	1		
11	0090000527	Nut	1	M30×2	GB/T6176=ISO8674
12	9000009737	Washer	1		
13	9000009507	Bearing seat	1		
14	0090000503	Bearing	1	32204	GB/T297
15	9000009504	Inner sleeve	1		
16	9000009503	Outer sleeve	1		
17	9000009505	Washer	1		
18	9000009506	Washer	1		
19	0090000502	Bearing	1	32304	GB/T297
20	9000009738	Gear	1		
21	0000025015	Washer	8	5	GB/T93
22	0000023675	Screw	4	M5×16	GB/T70.2=ISO7380
23	9000009739	Gear	1		
24	0090000117	Dowel pin	1	4×12	GB/T119.1=ISO2338
25	9000009509	Washer	1		
26	0000025066	Washer	1	14	GB/T856
27	0090000090	Nut	2	M14x1.5	GB/T6173=ISO8675
28	2390200005	Drive wheel	1		
29	2390223001	Screw	5		
30	9000009740	Side cover	1		
31	0090000521	Seal washer	2	160×2.65	GB/T3452.1=ISO3601-1

Fig. 19 Drive unit（28ELA-AC-1.6KW）

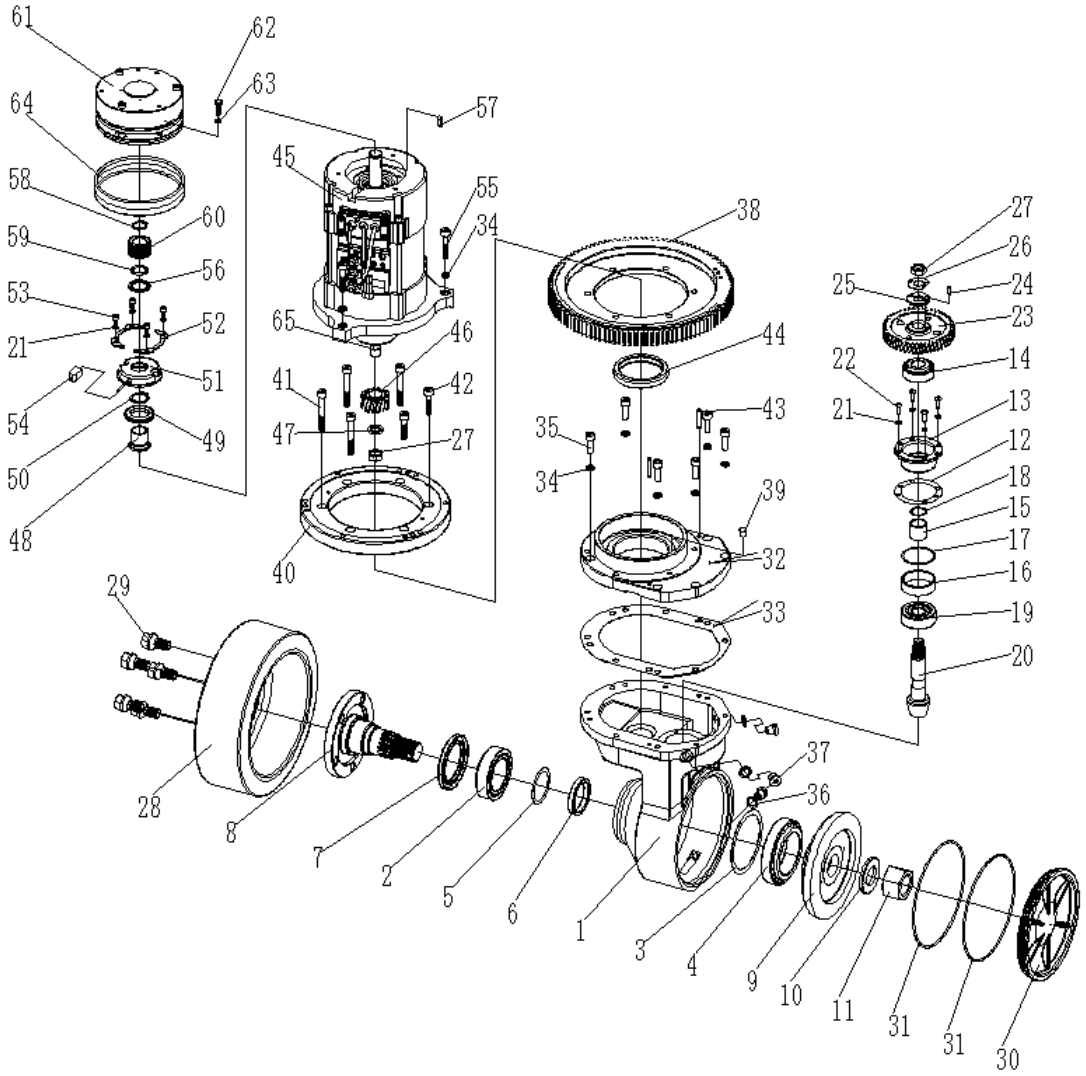

Fig. 19 Drive Unit（28ELA-AC-1.6KW）

No.	Art No.	Description	Qty.	Note	Standard
32	9000009741	Upper cover	1		
33	9000009742	Paper washer	1		
34	0000025001	Washer	9	8	GB/T93
35	0000023047	Screw	6	M8×25	GB/T70.1=ISO4762
36	0000022036	Washer	3	12	JB/T982
37	0090000506	Plug	3	M12×1.25	JB/ZQ4444
38	9000012079	Gear	1		
39	9000009744	Vent plug	1		
40	9000009745	Pivoting support	1		
41	0090000525	Screw	4	M8×60	GB/T70.1=ISO4762
42	0000023455	Screw	2	M8×35	GB/T70.1=ISO4762
43	0000028027	Dowel pin	2	6×30	GB/T119.1=ISO2338
44	0090000151	Oil seal	1	65×82×12	GB/T9877
45	9000009746	Motor	1		
46	9000009747	Gear	1		
47	0090000522	Washer	1	14	GB/T859
48	9000009748	Sleeve	1		
49	9000009523	Gear	1		
50	0000026013	Circlip	1	25	GB/T894.1
51	9000009524	Sensor	1		
52	9000009522	Flange	2		
53	0000023311	Screw	4	M5×10	
54	9000008854	Bushing	1		
55	0000023077	Screw	3	M8×40	GB/T70.1=ISO4762
56	9000009525	Spacer	1		
57	0000036001	Flat key	1	6×16	GB/T1096
58	0000026003	Circlip	1	20	GB/T894.1
59	0000022059	Seal ring	1	20×2.65	GB/T3452.1=ISO3601-1
60	9000009749	Bushing	1		
61	9000009750	Break	1		
62	0090000526	Bolt	3	M6×20	GB/T5782=ISO4014
63	0000025010	Washer	3	6	GB/T93
64	9000009521	Dust cover	1		
65	0090000523	Key	1	4×6.5×16	GB/T1099

Fig.20 Steering unit（ST DC 2032W）

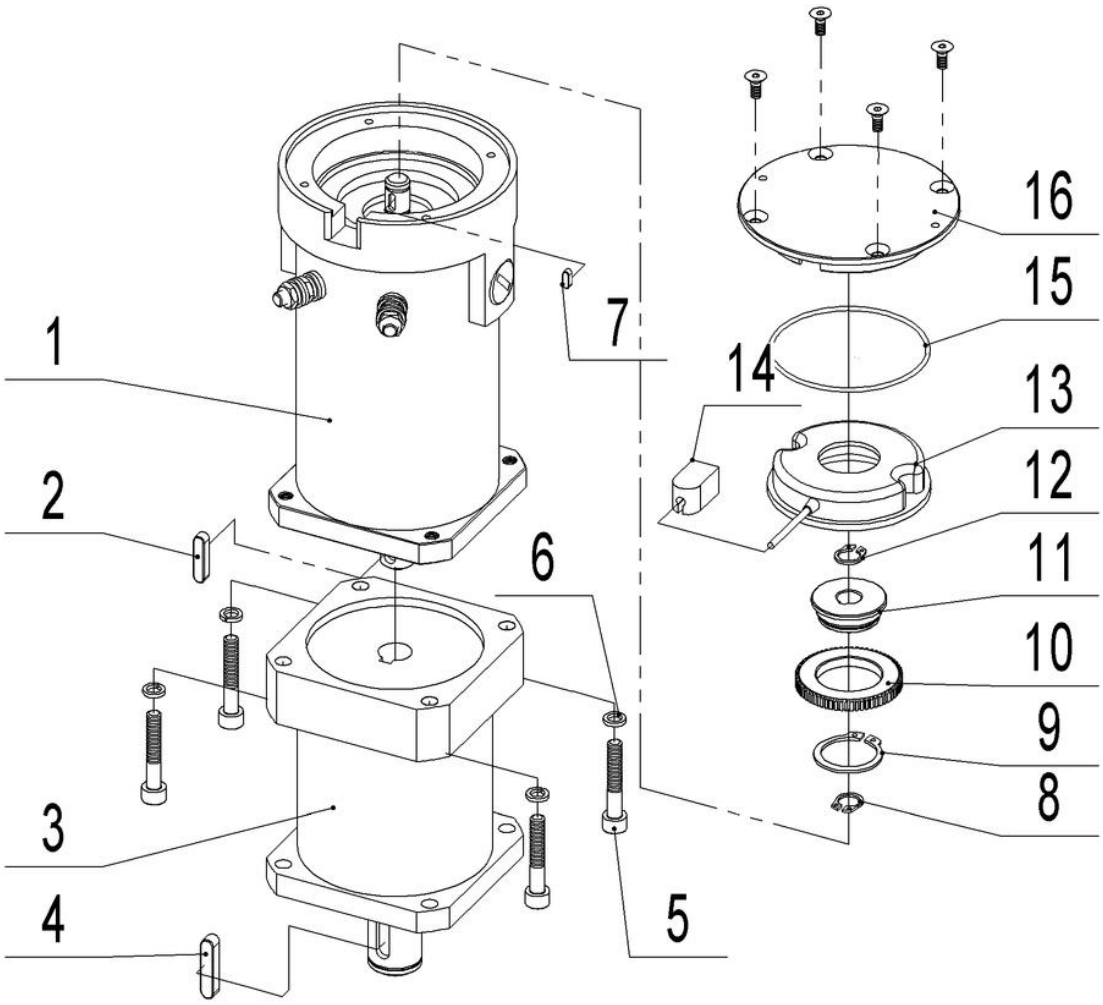

Fig. 20 Steering Unit（STDC 2032W）

No.	Art No.	Description	Qty.	Note	Standard
1	9000012080	Motor	1		
2	0090000524	Flat key	1	5x22	GB/T1096
3	9000009751	Speed reducer	1		
4	0090000118	Flat key	1	6x28	GB/T1096
5	0000023090	Screw	4	M6x35	GB/T70.1=ISO4762
6	0000025010	Washer	4	6	GB/T93
7	0090000773	Flat key	1	3x8	GB/T1096
8	0000026041	Circlip	2	10	GB/T894.1
9	0000026013	Circlip	1	25	GB/T894.1
10	9000009523	Speed sensor gear	1		
11	9000012081	Sleeve	1		
12	9000009524	Speed sensor	1		
13	9000008854	Bushing	1		
14	0090000294	O rubber seal ring	1	63x1.8	GB/T3452.1=ISO3601-1
15	9000008853	Protective cover	1		
16	0090000473	Screw	4	M4x10	GB/T70.3=ISO10642

Fig. 21 Controller assembly

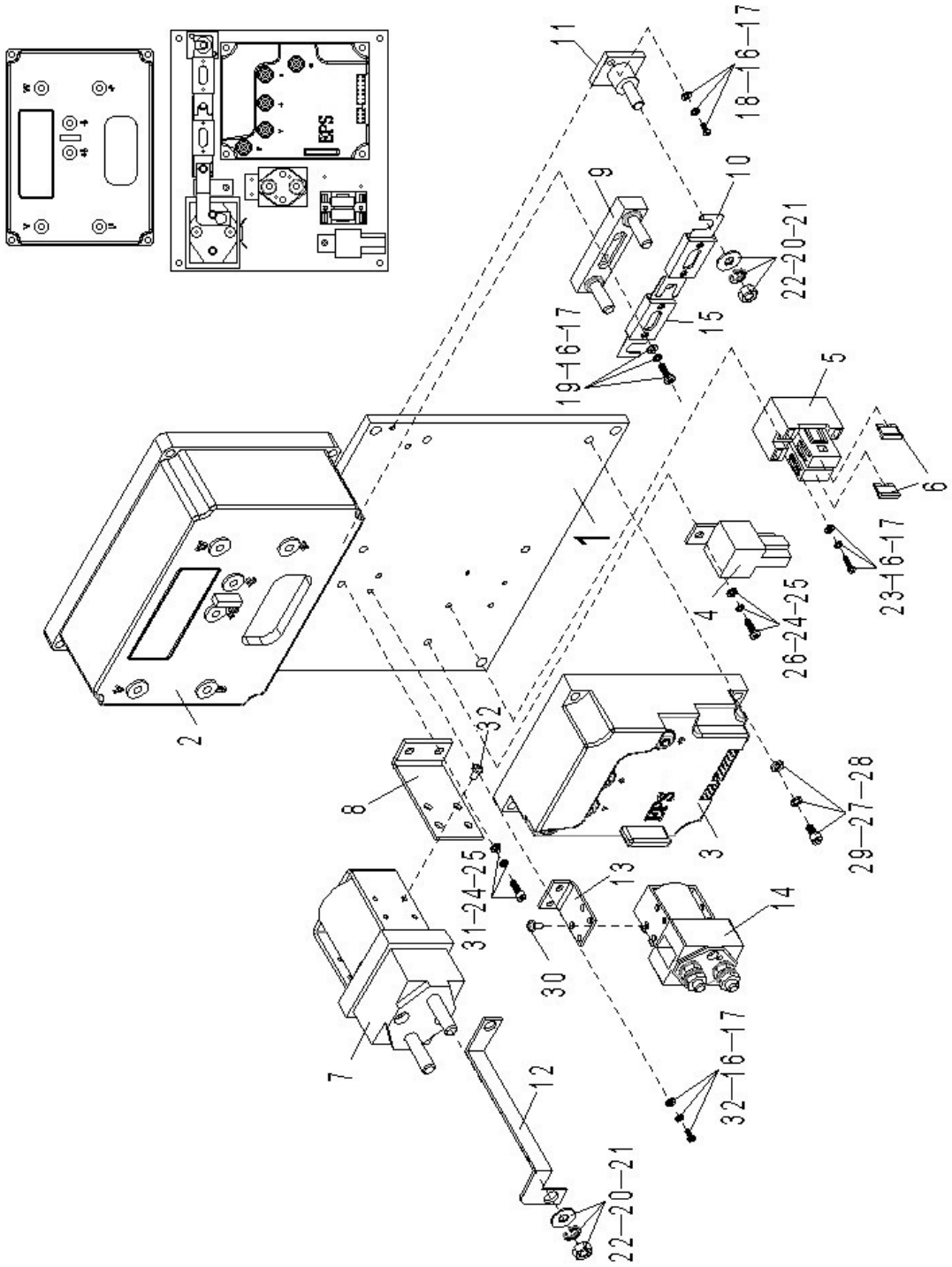

Fig. 21 Controller Assembly

No.	Art No.	Description	Qty.	Note	Standard
1	9000008002	Assembly plate	1		
2	9000009439	Controller	1		
3	9000000236	Controller	1	BD-SC-24/10	
	9000008584			BD-SC-24/10-3	
4	1000434041	Pump contactor	1		
5	9000008586	Fuse seat	1	BD-2X10A-1	
6	1000434040	Fuse	2	10A	
7	9000008636	Contactor	1		
8	9000007993	Assembly plate	1		
9	1000434007	Fuse seat	1		
10	9000008635	Fuse	1	350A	
11	0000023070	Screw	2	M3×25	GB/T70.1=ISO4762
12	9000008422	Copper bar	1		
13	0000025018	Washer	4	4	GB/T93
14	0000025019	Washer	4	4	GB/T95
15	0000023211	Screw	2	M4×16	GB/T818=ISO7045
16	0090000082	Screw	2	M4×30	GB/T70.1=ISO4762
17	0000023019	Screw	2	M4×30	GB/T818=ISO7045
18	1000434021	Fuse seat	1	BD-1×10A	
19	0000025015	Washer	3	5	GB/T93
20	0000025014	Washer	3	5	GB/T95
21	0000023039	Screw	3	M5×12	GB/T818=ISO7045
22	0000023716	Screw	1	M5×6	GB/T818=ISO7045
23	0000025001	Washer	2	8	GB/T93
24	0000025011	Washer	2	8	GB/T95
25	0000024086	Nut	2	M8	GB/T6170=ISO4032
26	3042434014	Fuse	1	15A	
27	0000025041	Washer	2	10	GB/T93
28	0000025106	Washer	2	10	GB/T95
29	0000024091	Nut	2	M10	GB/T6170=ISO4032

Fig. 22 Main wire

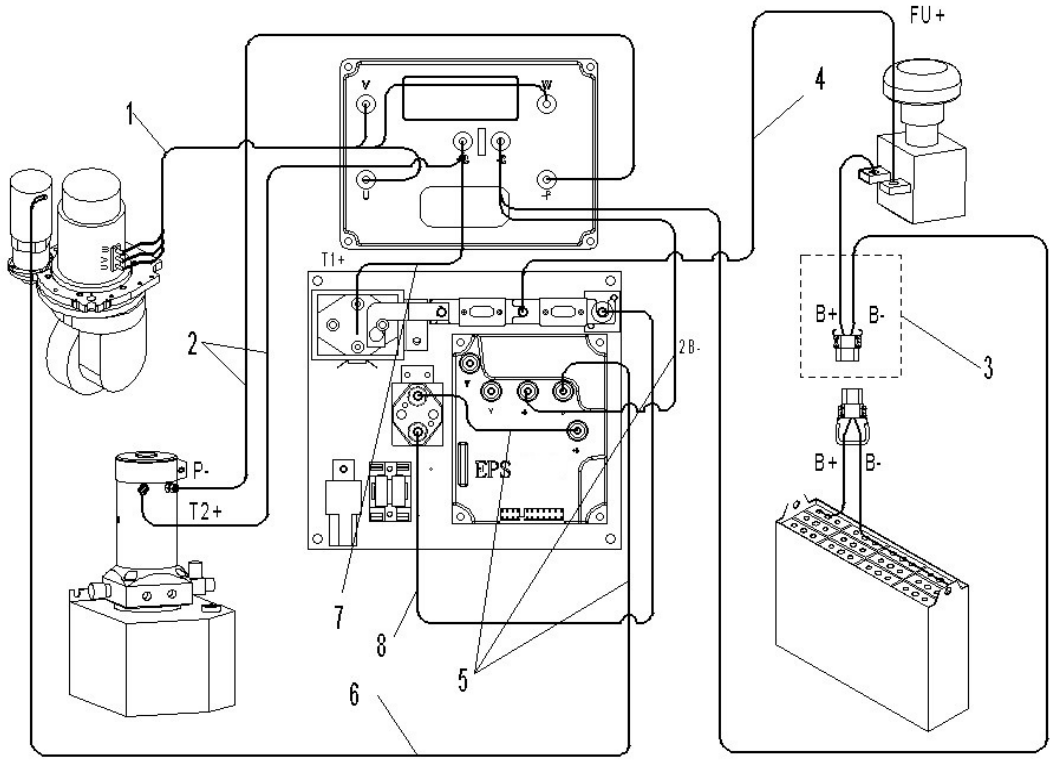

Fig. 22 Main Wire

No.	Art No.	Description	Qty.	Note
1	9000008415	Cable	1	
2	9000008416	Cable	1	
3	9000008417	Cable	1	
4	9000008418	FU+ cable	1	
5	9000008419	Cable	1	
6	9000008637	Cable	1	
7	9000009436	Cable	1	

Fig. 23 Indicator assembly

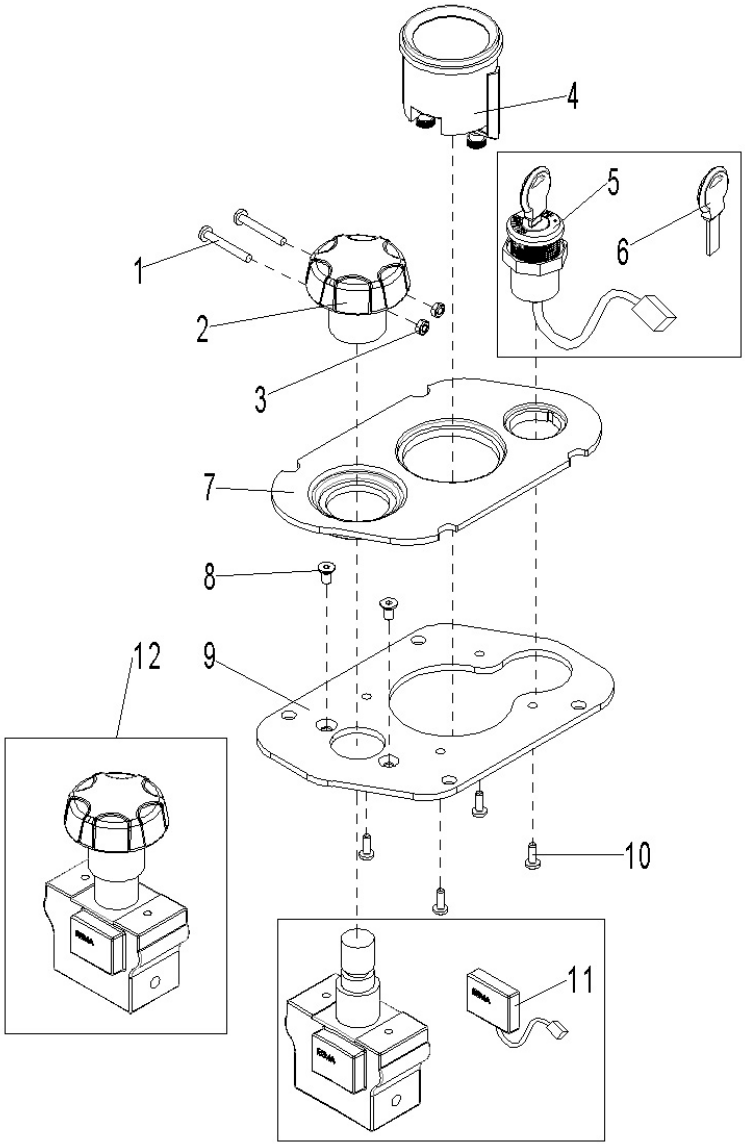

Fig. 23 Indicator Assembly

No.	Art No.	Description	Qty.	Note	Standard
1	0000023685	Screw	2	M3×25	GB/T818-2000=ISO7045
2	9000008516	DC power switch	1		
3	0000024002	Nut	2	M3	GB/T6170=ISO4032
4	9000000760	Indicator	1		
5	9000008326	Key switch	1		
6	9000008519	Key	1		
7	9000007938	Plastic plate	1		
8	0000023215	Screw	2	M5×10	GB/T70.3=ISO10642
9	9000007939	Fixing plate	1		
10	0090000272	Screw	4	M4×12	GB/T6560
11	9000008517	Proximity switch	1		
12	9000008515	Power switch	1		

Fig. 24 Electrical steering assembly

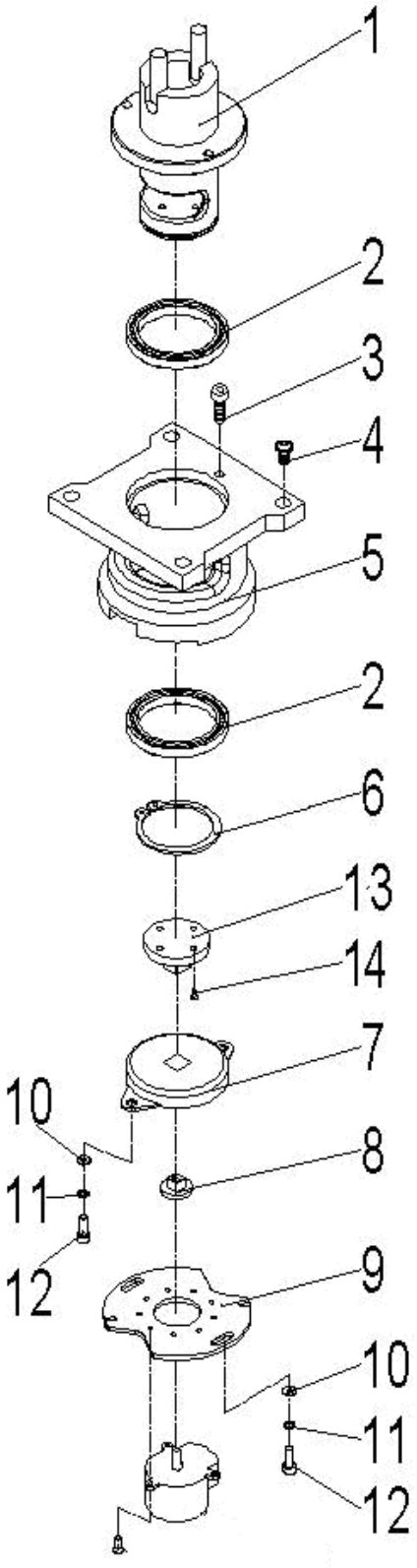

Fig. 24 Electrical Steering Assembly

No.	Art No.	Description	Qty.	Note	Standard
1	9000007422	Axle seat	1		
2	9000000240	Bearing	2	61810	GB/T276
3	0000023042	Screw	3	M6×10	GB/T70.1=ISO4762
4	0000023034	Screw	4	M10×20	GB/T70.1=ISO4762
5	9000007423	Fixing seat	1		
6	0000026043	Circlip	1	50	GB/T894.1
7	9000007806	Damper	1		
8	9000008736	Transition linking block	1		
9	9000008735	Fixing plate	1		
10	0000023032	Washer	4	5	GB/T95
11	0000025015	Washer	4	5	GB/T93
12	0000023311	Screw	4	M5×10	GB/T70.1=ISO4762
13	9000007424	Linking block	1		
14	0000023073	Screw	4	M4×10	GB/T70.1=ISO4762

Fig. 25 Lifting hydraulic system（Three-stage-mast）

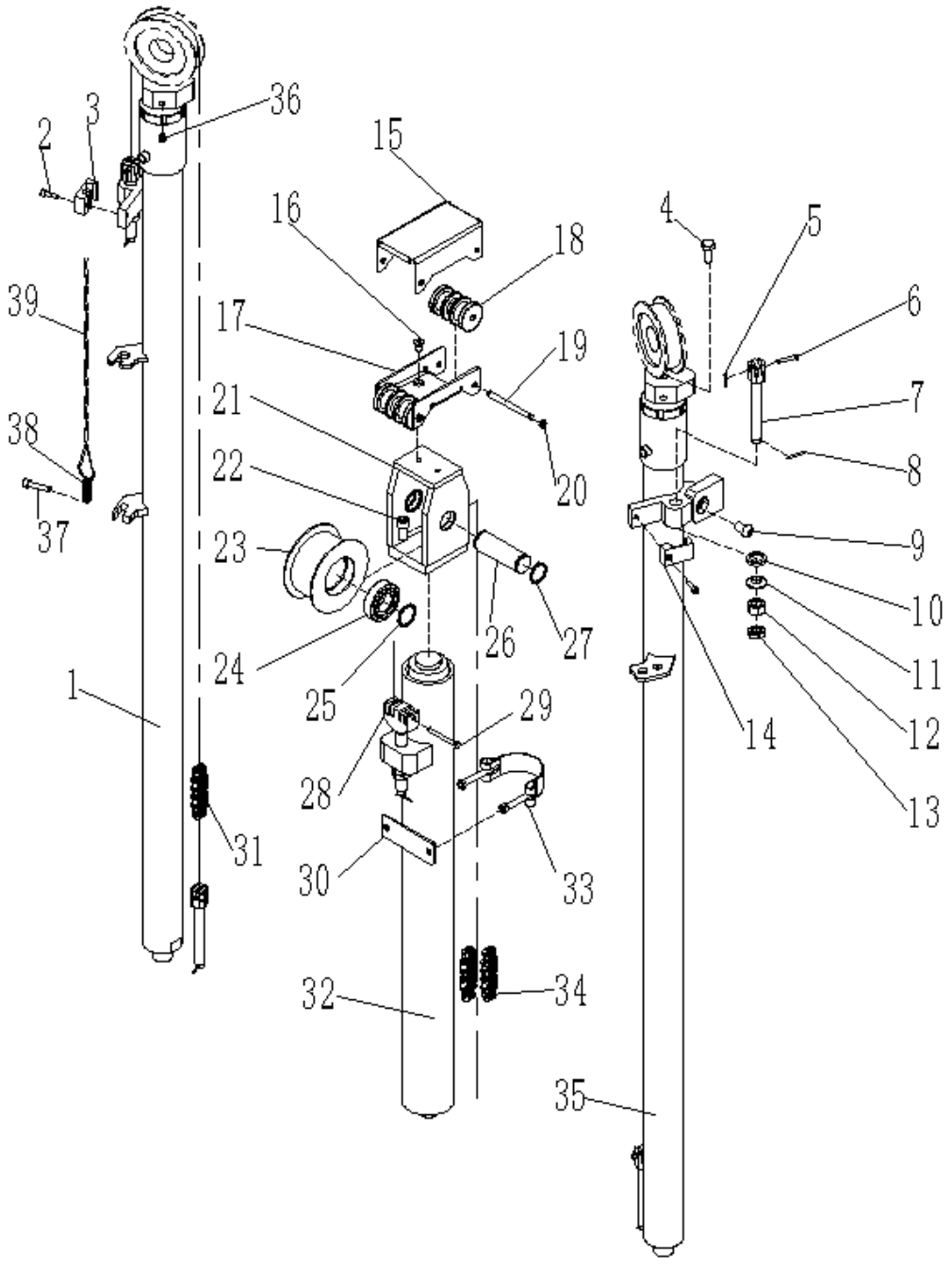

Fig. 25 Lifting Hydraulic System（Three-stage-mast）

No.	Art No.	Description	Qty.	Note	Standard
1	9000007960	Cylinder	1	Three-stage-mast 4000	
	9000009573			Three-stage-mast	

				4600	
	9000009584			Three-stage-mast5000	
	9000009595			Three-stage-mast5500	
2	0000023020	Screw	2	M6×20	GB/T70.1=ISO4762
3	9000007959	Fixing clamp	1		
4	0000023101	Screw	2	M12×25	GB/T5783=ISO4017
5	0000028010	Split pin	6	2×20	GB/T91=ISO1234
6	0090000451	Pin roll	4	6×30	GB/T882=ISO2341
7	9000007984	Bolt	4		
8	0000028104	Split pin	5	2.5×25	GB/T91=ISO1234
9	0090000372	Screw	2	M12×20	GB/T70.2=ISO7380
10	0000025099	Washer	5	16	GB/T850
11	0000025098	Washer	5	16	GB/T849
12	0090000442	Nut	5	M16×1.5	GB/T6171=ISO8673
13	0000024014	Nut	5	M16×1.5	GB/T6173=ISO8675
14	9000007958	Fixing clamp	1		
15	9000007977	Seal plate	1		
16	0000023557	Screw	2	M8×16	GB/T70.3=ISO10642
17	9000007969	Pulley seat	1		
18	9000007976	Pulley	2		
19	9000007975	Axle	2		
20	0000026051	Circlip	4	8	GB/T894.1
21	9000007973	Chain wheel frame	1		
22	0000023156	Screw	1	M12×25	GB/T70.1=ISO4762
23	9000007971	Chain wheel	1		
24	0000027012	Bearing	2	6206	GB/T276
25	9000007970	Washer	2		
26	9000007972	Axle	1		
27	0000026008	Circlip	2	30	GB/T894.1
28	9000007986	Bolt	1		

Fig. 25 Lifting hydraulic system（Three-stage-mast）

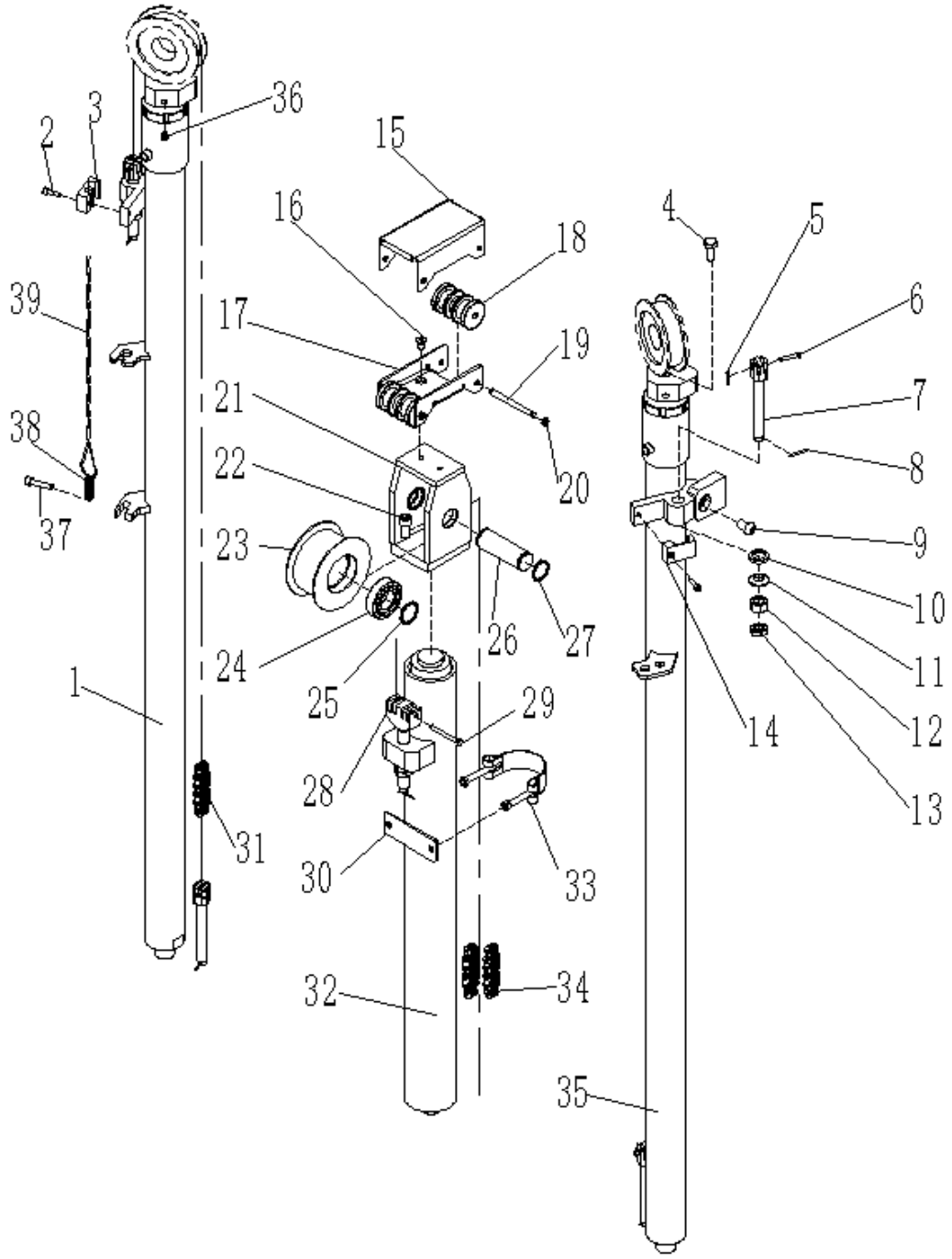

Fi

g. 25 Lifting Hydraulic System（Three-stage-mast）

No.	Art No.	Description	Qty.	Note	Standard
29	0090000319	Pin roll	2	6×60	GB/T882=ISO2341
30	9000007967	Cylinder pad	1		
31	0090000316	Chain	2	LH1044×123 Three-stage-mast 4000	GB/T6074=ISO4347
	0000029297			LH1044×135 Three-stage-mast	

				4600	
	0090000530			LH1044×145 Three-stage-mast5000	
	0090000531			LH1044×155 Three-stage-mast5500	
32	9000007962	Cylinder	1	Three-stage-mast 4000	
	9000009575			Three-stage-mast 4600	
	9000009586			Three-stage-mast5000	
	9000009597			Three-stage-mast5500	
33	9000007802	Embrace hoop assembly	1		
34	0000029138	Chain	2	LH1044×81 Three-stage-mast 4000	GB/T6074=ISO4347
	0090000532			LH1044×87 Three-stage-mast 4600	
	0090000533			LH1044×93 Three-stage-mast5000	
	0090000534			LH1044×97 Three-stage-mast5500	
35	9000007961	Cylinder	1	Three-stage-mast 4000	
	9000009574			Three-stage-mast 4600	
	9000009585			Three-stage-mast 5000	
	9000009596			Three-stage-mast5500	
36	0090000318	Screw	2	M10×12	GB/T79=ISO4028
37	0000023106	Screw	1	M6×30	GB/T70.1=ISO4762
38	9000009836	Spring	1		
39	9000008681	Cable bushing	1		

Fig. 26 Lifting hydraulic system（Two-stage-mast）

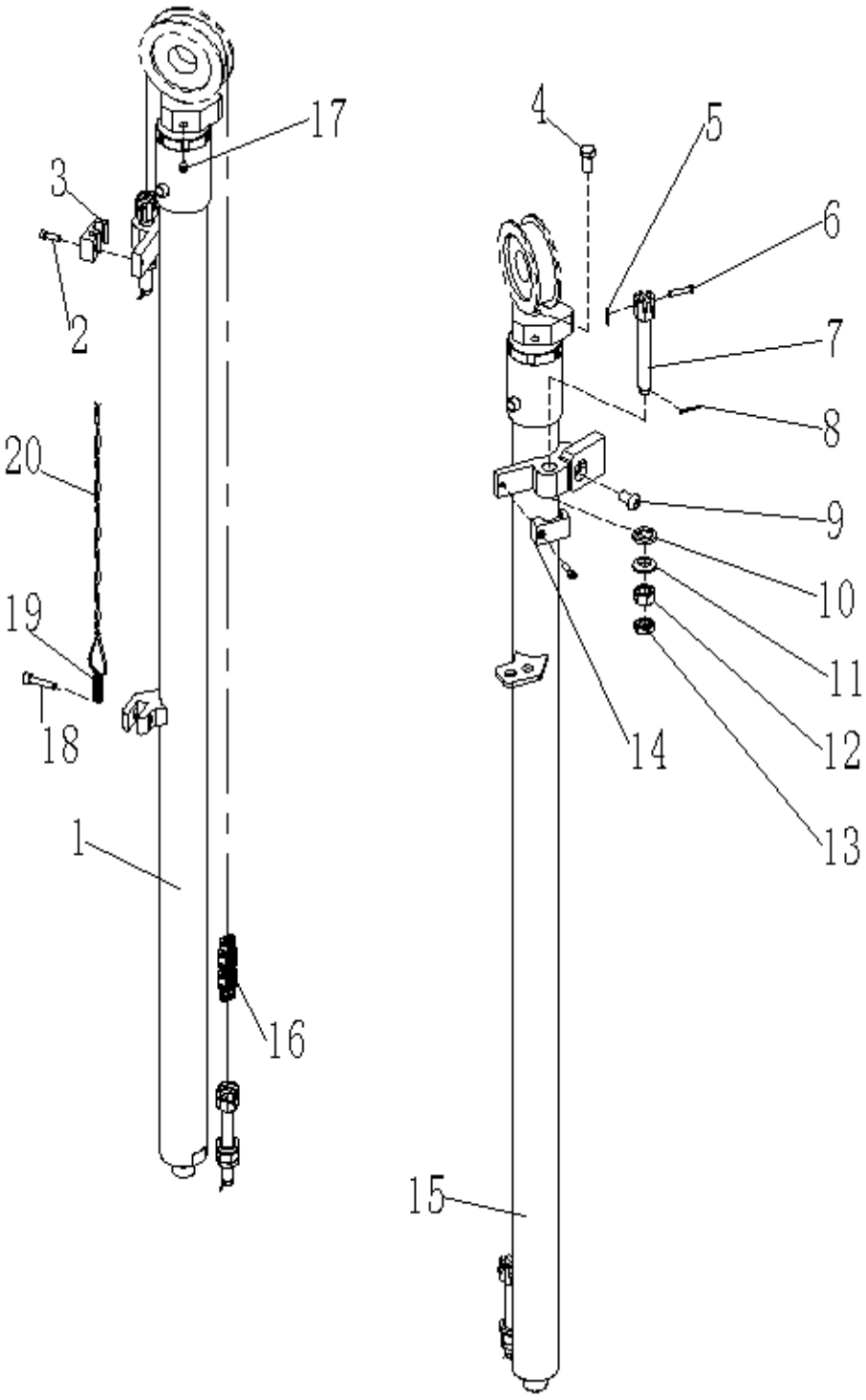

Fig. 26 Lifting Hydraulic System（Two-stage-mast）

No.	Art No.	Description	Qty.	Note	Standard
1	9000009617	Cylinder	1	Two-stage-mast 2900	
	9000009629			Two-stage-mast 3200	
	9000009638			Two-stage-mast 3600	
2	0000023020	Screw	2	M6×20	GB/T70.1=ISO4762
3	9000007959	Fixing clamp	1		
4	0000023101	Screw	2	M12×25	GB/T5783=ISO4017
5	0000028010	Split pin	6	2×20	
6	0090000451	Pin roll	4	6×30	
7	9000007984	Bolt	4		
8	0000028104	Split pin	5	2.5×25	GB/T91=ISO1234
9	0090000372	Screw	2	M12×20	GB/T70.2=ISO7380
10	0000025099	Washer	5	16	GB/T850
11	0000025098	Washer	5	16	GB/T849
12	0090000442	Nut	5	M16×1.5	GB/T6171=ISO8673
13	0000024014	Nut	5	M16×1.5	GB/T6173=ISO8675
14	9000007958	Fixing clamp	1		
15	9000009618	Cylinder	1	Two-stage-mast 2900	
	9000009630			Two-stage-mast 3200	
	9000009639			Two-stage-mast 3600	
16	0000029322	Chain	2	LH1044×129 Two-stage-mast 2900	GB/T6074=ISO4347
	0090000588			LH1044×139 Two-stage-mast 3200	
	0090000536			LH1044×151	

				Two-stage-mast 3600	
17	0090000318	Screw	2	M10×12	GB/T79=ISO4028
18	0000023455	Screw	1	M8x35	GB/T70.1=ISO4762
19	9000009836	Spring	1		
20	9000008681	Cable bushing	1		

Fig. 27 Reach、 tilt hydraulic system

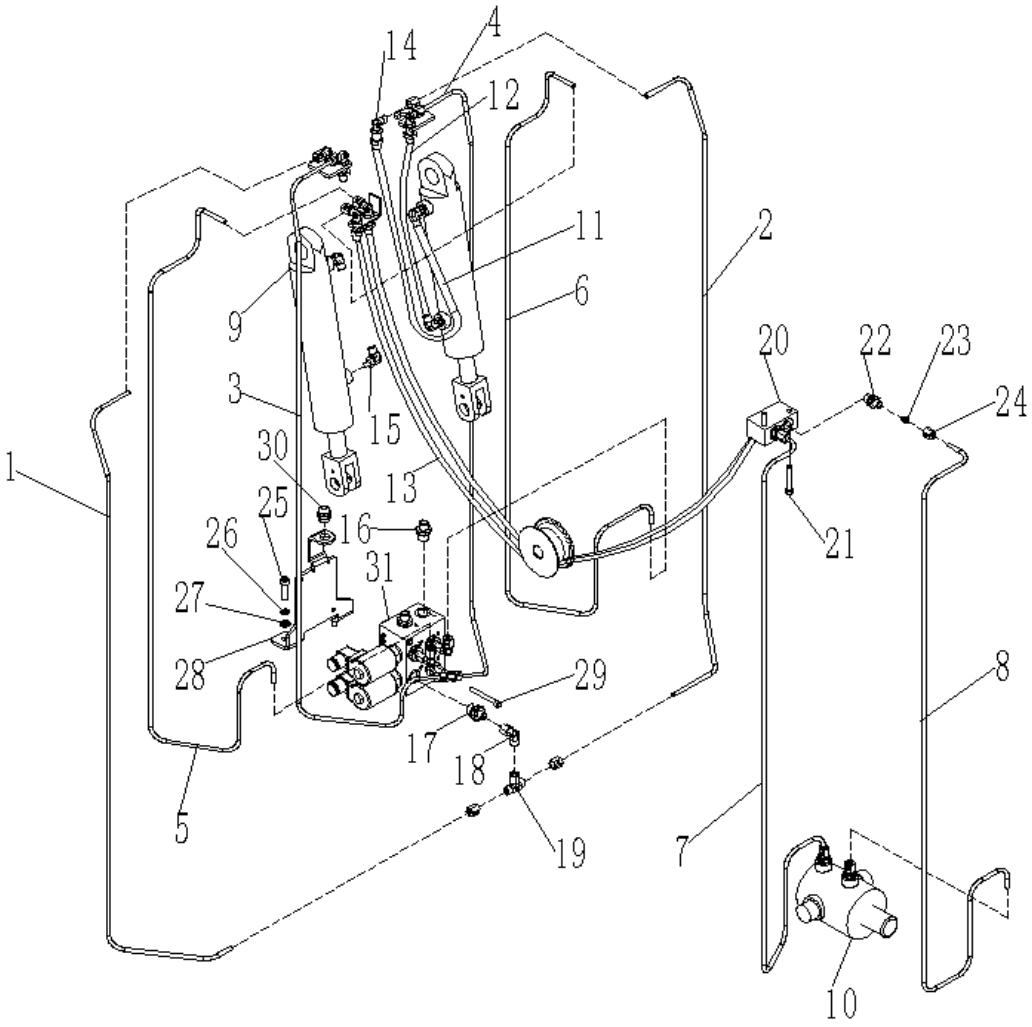

Fig. 27 Reach 、Tilt Hydraulic System

No.	Art No.	Description	Qty.	Note	Standard
1	9000008015	Steel pipe	1		
2	9000008014	Steel pipe	1	Three-stage-mast	
	9000009644			Two-stage-mast	
3	9000008016	Steel pipe	1		
4	9000008013	Steel pipe	1	Three-stage-mast	
	9000009643			Two-stage-mast	
5	9000008018	Steel pipe	1		
6	9000008017	Steel pipe	1		
7	9000008021	Steel pipe	1	Three-stage-mast	
	9000009646			Two-stage-mast	
8	9000008020	Steel pipe	1	Three-stage-mast	
	9000009645			Two-stage-mast	
9	9000008010	Cylinder	2		
10	9000008011	Cylinder	1		
11	9000007827	Tube	2		
12	9000007810	Tube	2		
13	9000007811	Tube	2		
14	9000007844	Angle	6		
15	9000007834	Joint	4		
16	9000007831	Joint	2	Three-stage-mast	
	9000007832			Two-stage-mast	
17	9000007830	Joint	4		
18	9000007837	Angle	3		
19	9000007839	Angle	2		
20	9000008019	Valve plate	1		
21	0090000321	Screw	2	M6×45	GB/T70.1=ISO4762
22	9000007829	Joint	6		
23	9000007850	Bushing	16		
24	9000007847	Nut	16		
25	0000023044	Screw	2	M8×20	GB/T70.1=ISO4762
26	0000025001	Washer	2	8	GB/T93
27	0000025011	Washer	2	8	GB/T95
28	9000008022	Assembly plate	1	Three-stage-mast	
	9000009647			Two-stage-mast	
29	0000023872	Screw	2	M6×55	GB/T70.1=ISO4762
30	9000008679	Cable tighten components	1	Three-stage-mast	
31	9000008802	Valve	1		

Fig. 28 Lifting cylinder assembly（Three-stage-mast）

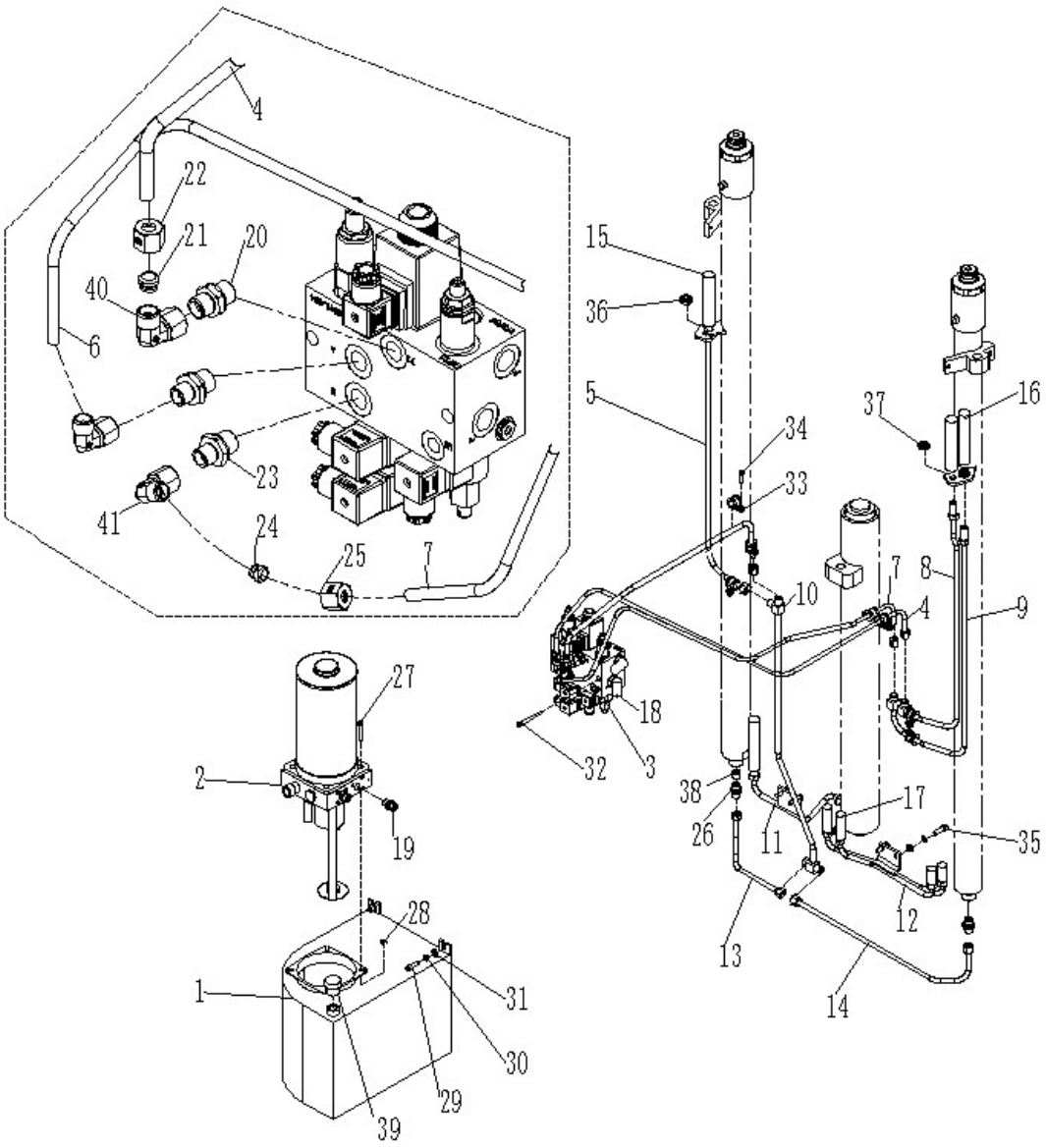

Fig. 28 Lifting Cylinder Assembly（Three-stage-mast）

No.	Art No.	Description	Qty.	Note	Standard
1	9000008032	Oil cylinder	1		
2	9000007858	Pump	1		
3	9000007853	Valve	1		
4	9000008012	Steel pipe	1		
5	9000008026	Steel pipe	1		
6	9000008035	Steel pipe	1		
7	9000008034	Steel pipe	1		
8	9000008025	Steel pipe	1		
9	9000008024	Steel pipe	1		
10	9000008023	Steel pipe	1		
11	9000008029	Steel pipe	1		
12	9000008033	Steel pipe	1		
13	9000008030	Steel pipe	1		
14	9000008031	Steel pipe	1		
15	9000010326	Hose	1	Three-stage-mast 4000	
	9000010327			Three-stage-mast 4600	
	9000010328			Three-stage-mast 5000	
	9000010316			Three-stage-mast 5500	
16	9000010324	Hose	2	Three-stage-mast 4000	
	9000010325			Three-stage-mast 4600	
	9000009653			Three-stage-mast 5000	
	9000010315			Three-stage-mast 5500	
17	9000008801	Hose	2	Three-stage-mast 4000	

	9000008815			Three-stage-mast 4600	
	9000010312			Three-stage-mast 5000	
	9000008817			Three-stage-mast 5500	
18	9000007826	Hose	2		
19	9000007833	Joint	2		
20	9000007832	Joint	3		
21	9000007852	Bushing	2		
22	9000007849	Nut	2		

Fig. 28 Lifting cylinder assembly（Three-stage-mast）

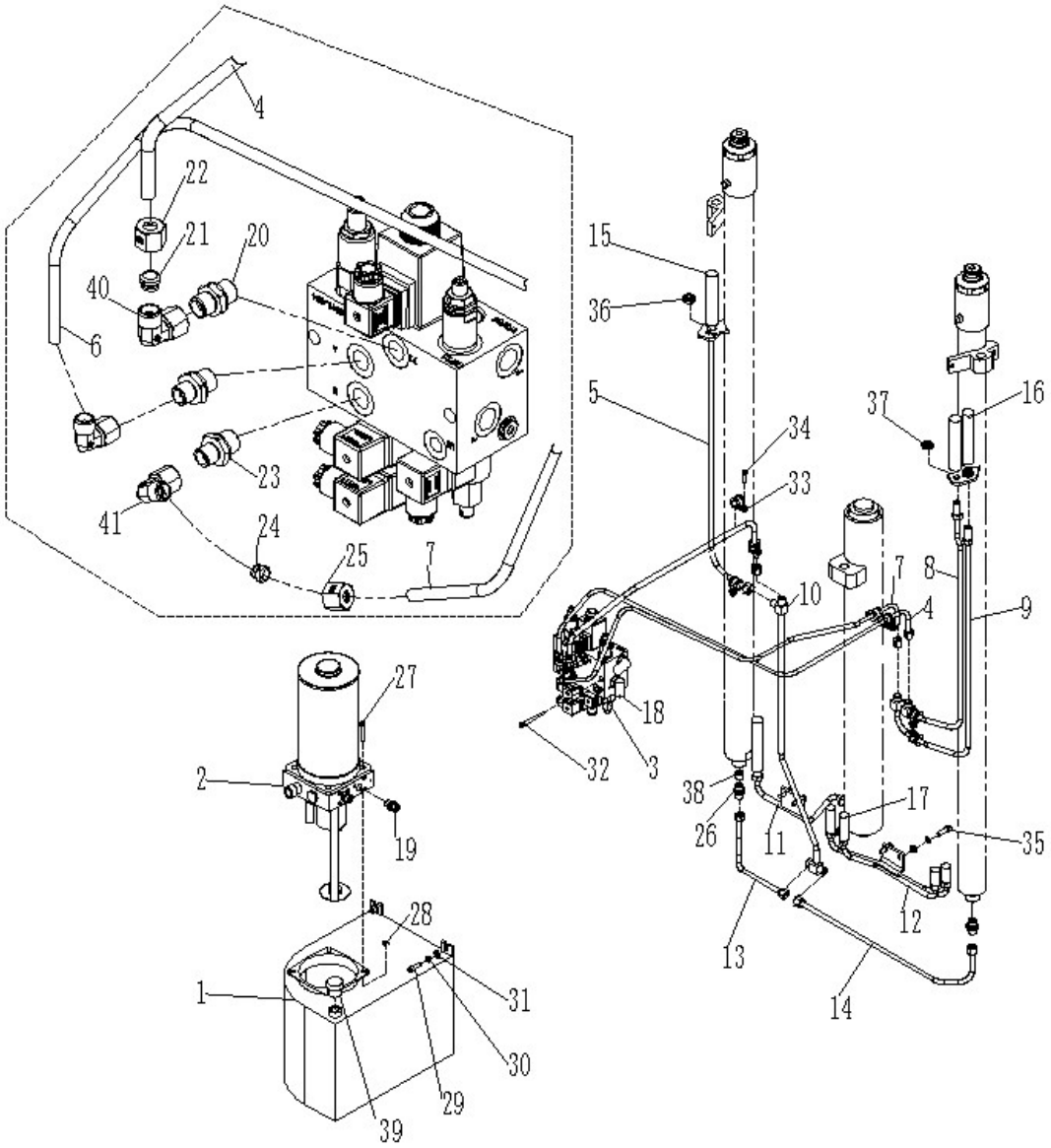

Fig. 28 Lifting Cylinder Assembly（Three-stage-mast）

No.	Art No.	Description	Qty.	Note	Standard
23	9000007831	Joint	2		
24	9000007851	Bushing	4		
25	9000007848	Nut	4		
26	9000007842	Joint	3		
27	0090000020	Screw	4	M6×40	GB/T70.1=ISO4762
28	0000024068	Nut	4	M6	GB/T6170=ISO4032
29	0000023044	Screw	2	M8×20	GB/T70.1=ISO4762
30	0000025001	Washer	6	8	GB/T93
31	0000025011	Washer	6	8	GB/T95
32	0090000449	Screw	2	M6×70	GB/T70.1=ISO4762
33	9000008325	Pipe clamp	6		
34	0000023053	Screw	6	M6×12	GB/T70.1=ISO4762
35	0000023047	Screw	4	M8×25	GB/T70.1=ISO4762
36	0000024014	Nut	1	M16×1.5	GB/T6173=ISO8675
37	0090000090	Nut	2	M14×1.5	GB/T6173=ISO8675
38	2000337001	Safety valve	3		
39	2000303001	Vent plug	1		
40	9000007838	Elbow	1		
41	9000010306	Elbow	2		

Fig. 29 Lifting cylinder assembly（Two-stage-mast）

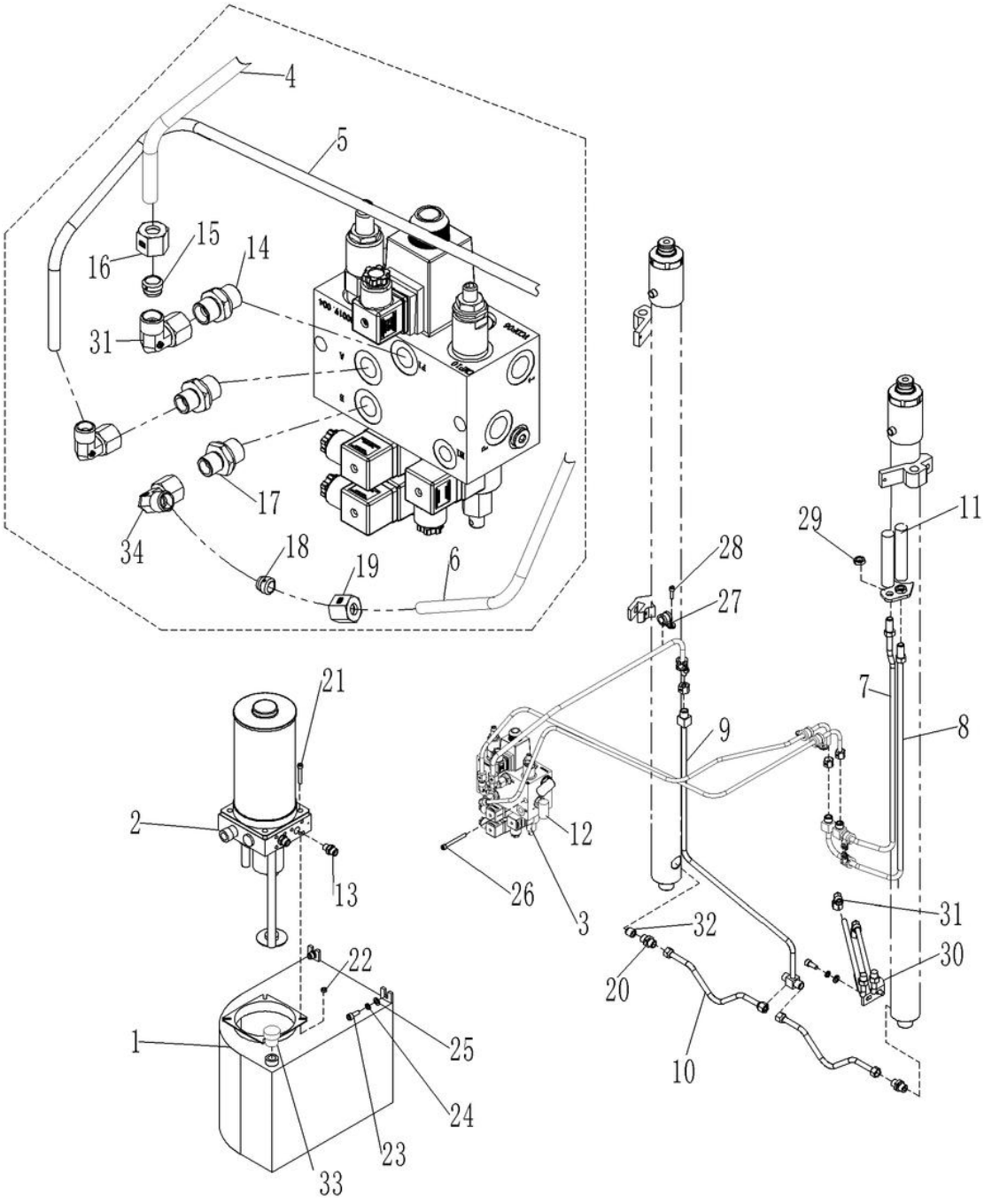

Fig. 29 Lifting Cylinder Assembly（Two-stage-mast）

No.	Art No.	Description	Qty.	Note	Standard
1	9000008032	Oil cylinder	1		
2	9000007858	Pump	1		
3	9000007853	Valve	1		
4	9000008012	Steel tube	1		
5	9000008035	Steel tube	1		
6	9000008034	Steel tube	1		
7	9000008025	Steel tube	1		
8	9000008024	Steel tube	1		
9	9000009649	Steel tube	1		
10	9000009650	Steel tube	2		
11	9000010312	Tube	2	Two-stage-mast 2900	
	9000010313			Two-stage-mast 3200	
	9000010314			Two-stage-mast 3600	
12	9000007826	Tube	2		
13	9000007833	Joint	2		
14	9000007832	Joint	3		
15	9000007852	Bushing	2		
16	9000007849	Nut	2		
17	9000007831	Joint	2		
18	9000007851	Bushing	4		
19	9000007848	Nut	4		
20	9000007842	Joint	3		
21	0090000020	Screw	4	M6×40	GB/T70.1=ISO4762
22	0000024068	Nut	4	M6	GB/T6170=ISO4032
23	0000023044	Screw	2	M8×20	GB/T70.1=ISO4762
24	0000025001	Washer	6	8	GB/T93
25	0000025011	Washer	6	8	GB/T95
26	0090000449	Screw	2	M6×70	GB/T70.1=ISO4762
27	9000008325	Pipe clamp	6		
28	0000023053	Screw	6	M6×12	GB/T70.1=ISO4762
29	0090000090	Nut	2	M14×1.5	GB/T6173=ISO8675
30	9000009642	Steel tube	1		
31	9000007838	Joint	3		
32	2000337001	Safety valve	2		
33	2000303001	Vent plug	1		
34	9000010306	Elbow	2		

Fig. 30 Left lifting cylinder（Three-stage-mast）

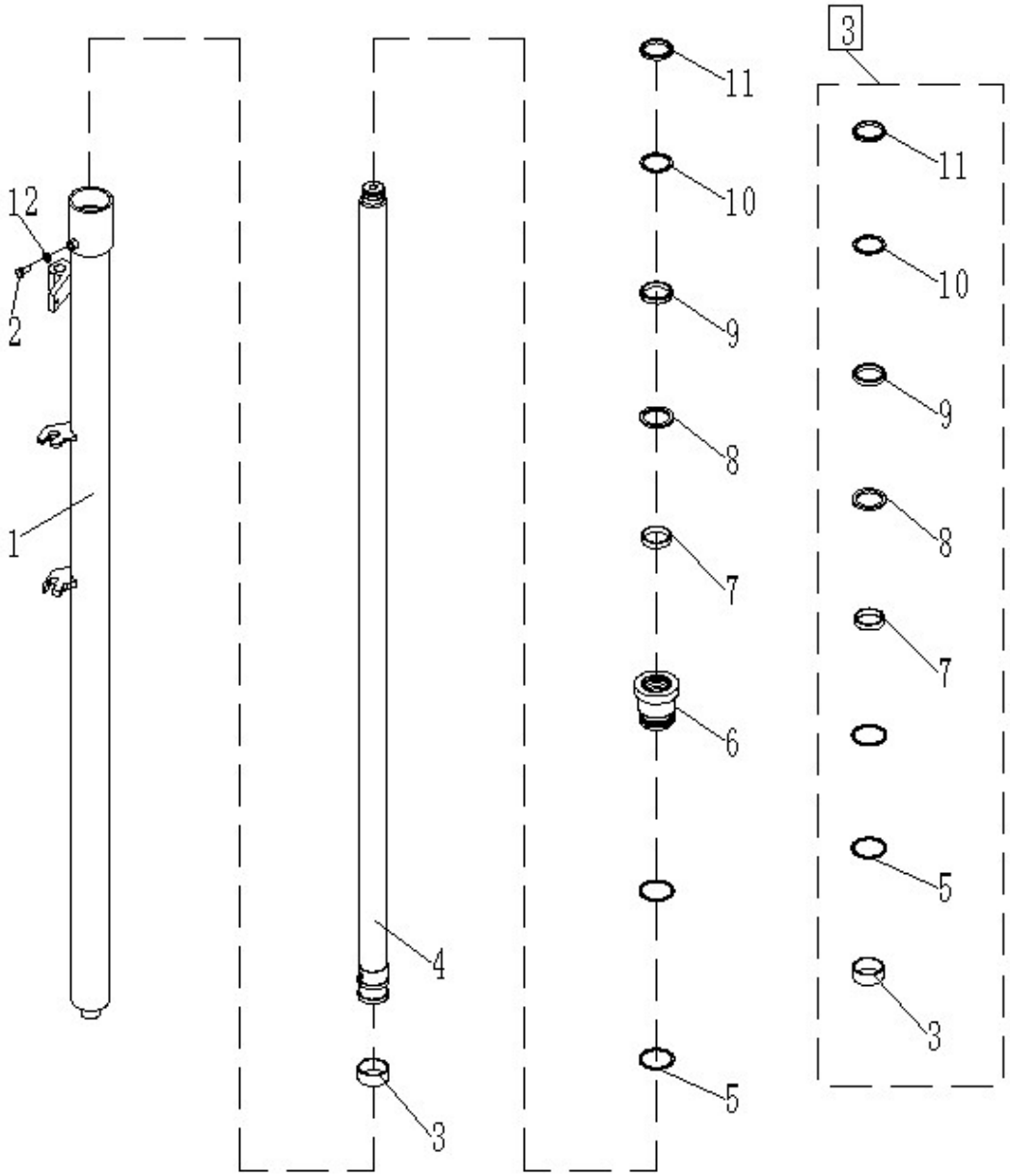

Fig. 30 Left Lifting Cylinder（Three-stage-mast）

No.	Art No.	Description	Qty.	Note	Standard
1	9000009667	Cylinder	1	Three-stage-mast 4000	
	9000009668			Three-stage-mast 4600	
	9000009669			Three-stage-mast5000	
	9000009670			Three-stage-mast5500	
2	0000023415	Screw	1	M8x10	GB/T70.1=ISO4762
3	9000009674	Supporting ring of hole	1	43X48X20	
4	9000009654	Piston rod	1	Three-stage-mast 4000	
	9000009655			Three-stage-mast 4600	
	9000009656			Three-stage-mast5000	
	9000009657			Three-stage-mast5500	
5	0000022018	O ring	2	55X3.1	GB/T3452.1=ISO3601-1
6	9000009662	Guide sleeve	1		
7	9000009666	Supporting ring for shaft	1	42X46X10	
8	9000009665	Seal ring	1	42X52.7X4.2	
9	9000009663	Y ring for shaft	1	42X50X7.5/8	
10	9000009664	Circlip	1	42X50X2	
11	9000009661	Dust cover	1	42X50X5/6.5	
12	0000022026	Washer	1	8	JB/T982
Оши	9000009776	Sealing assembly	1		

Fig. 31 Left lifting cylinder（Two-stage-mast）

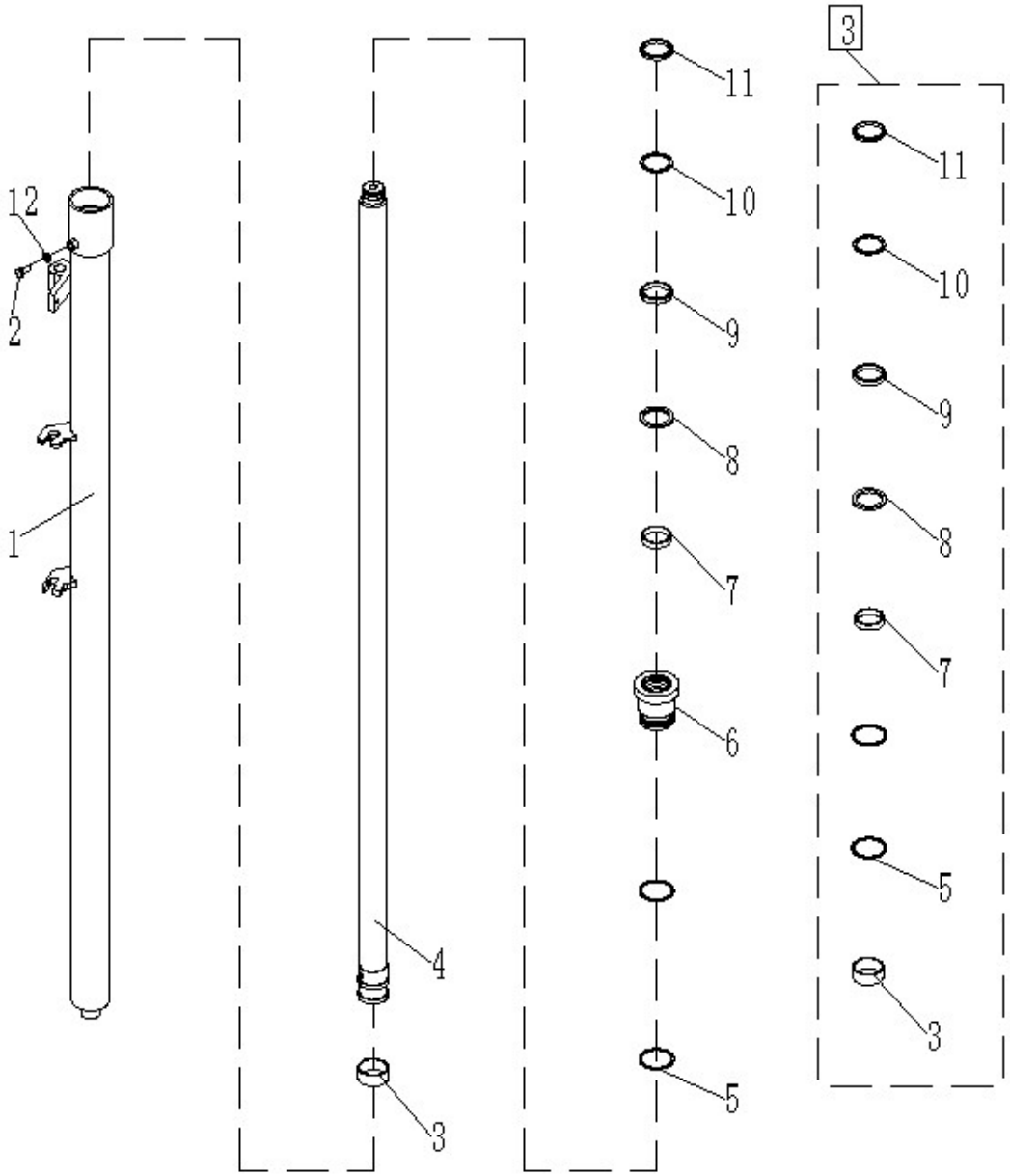

Fig. 31 Left Lifting Cylinder（Two-stage-mast）

No.	Art No.	Description	Qty.	Note	Standard
1	9000009671	Cylinder	1	Two-stage-mast 2900	
	9000009672			Two-stage-mast 3200	
	9000009673			Two-stage-mast 3600	
2	0000023415	Screw	1	M8x10	GB/T70.1=ISO4762
3	9000009674	Supporting ring of hole	1	43X48X20	
4	9000009658	Piston rod	1	Two-stage-mast 2900	
	9000009659			Two-stage-mast 3200	
	9000009660			Two-stage-mast 3600	
5	0000022018	O ring	2	55X3.1	GB/T3452.1=ISO3601-1
6	9000009796	Guide sleeve	1		
7	9000009666	Supporting ring of axle	1	42X46X10	
8	9000009665	Seal ring	1	42X52.7X4.2	
9	9000009663	Y ring of axle	1	42X50X7.5/8	
10	9000009664	Circlip	1	42X50X2	
11	9000009661	Dust ring	1	42X50X5/6.5	
12	0000022026	Washer	1	8	JB/T982
□,3	9000009776	Sealing assembly	1		

Fig. 32 Right lifting cylinder（Three-stage-mast）

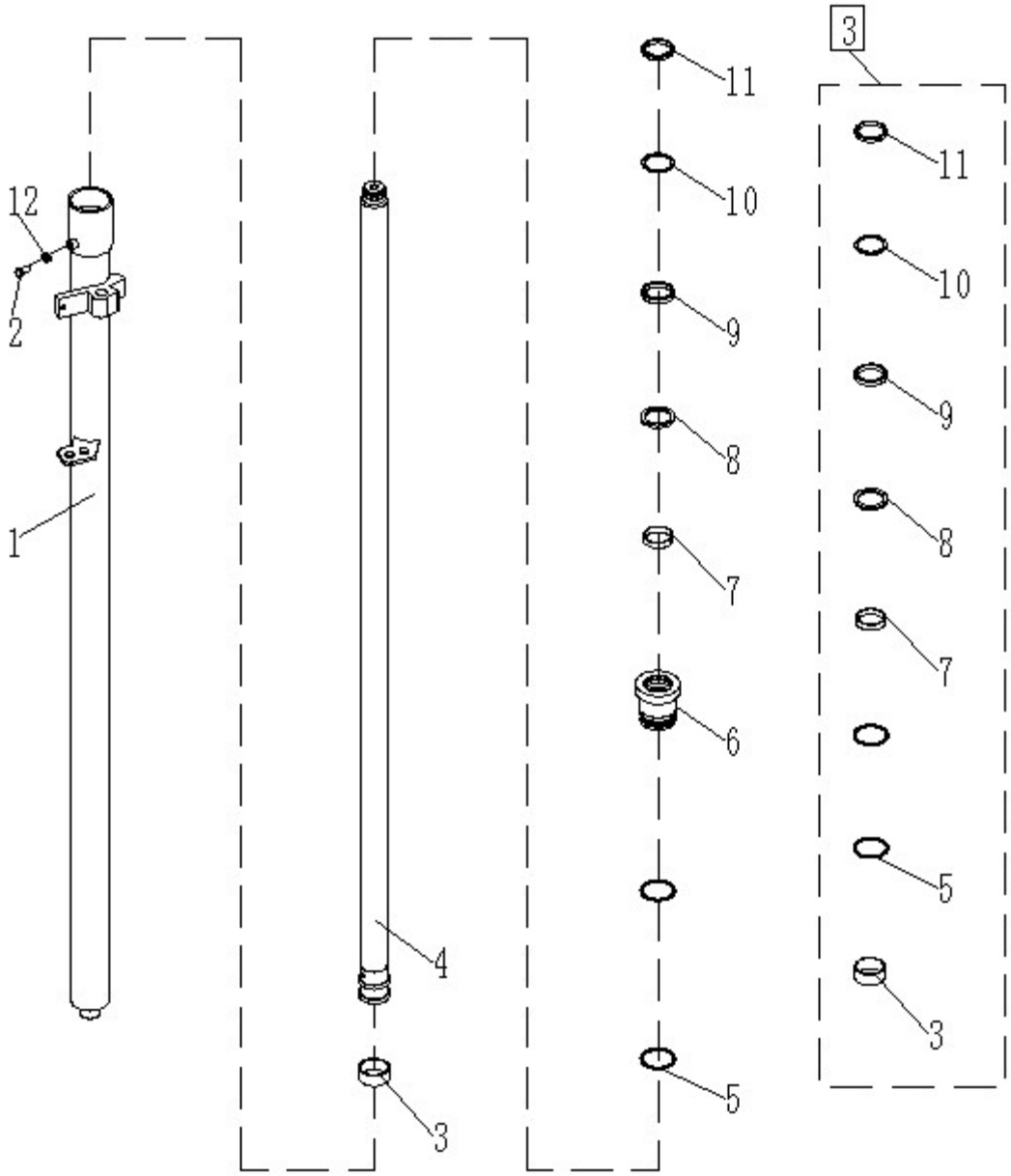

Fig. 32Right Lifting Cylinder（Three-stage-mast）

No.	Art No.	Description	Qty.	Note	Standard
1	9000009683	Cylinder	1	Three-stage-mast 4000	
	9000009684			Three-stage-mast 4600	
	9000009685			Three-stage-mast5000	
	9000009686			Three-stage-mast 5500	
2	0000023415	Screw	1	M8x10	GB/T70.1=ISO4762
3	9000009674	Supporting ring of hole	1	43X48X20	
4	9000009675	Piston rod	1	Three-stage-mast 4000	
	9000009676			Three-stage-mast 4600	
	9000009677			Three-stage-mast5000	
	9000009678			Three-stage-mast5500	
5	0000022018	O ring	2	55X3.1	GB/T3452.1=ISO3601-1
6	9000009682	Guiding ring	1		
7	9000009666	Supporting ring fof axle	1	42X46X10	
8	9000009665	Seal ring	1	42X52.7X4.2	
9	9000009663	Y ring of axle	1	42X50X7.5/8	
10	9000009664	Circlip	1	42X50X2	
11	9000009661	Dust ring	1	42X50X5/6.5	
12	0000022026	Washer	1	8	JB/T982
□,3	9000009776	Sealing assembly	1		

Fig. 33Right lifting cylinder（Two-stage-mast）

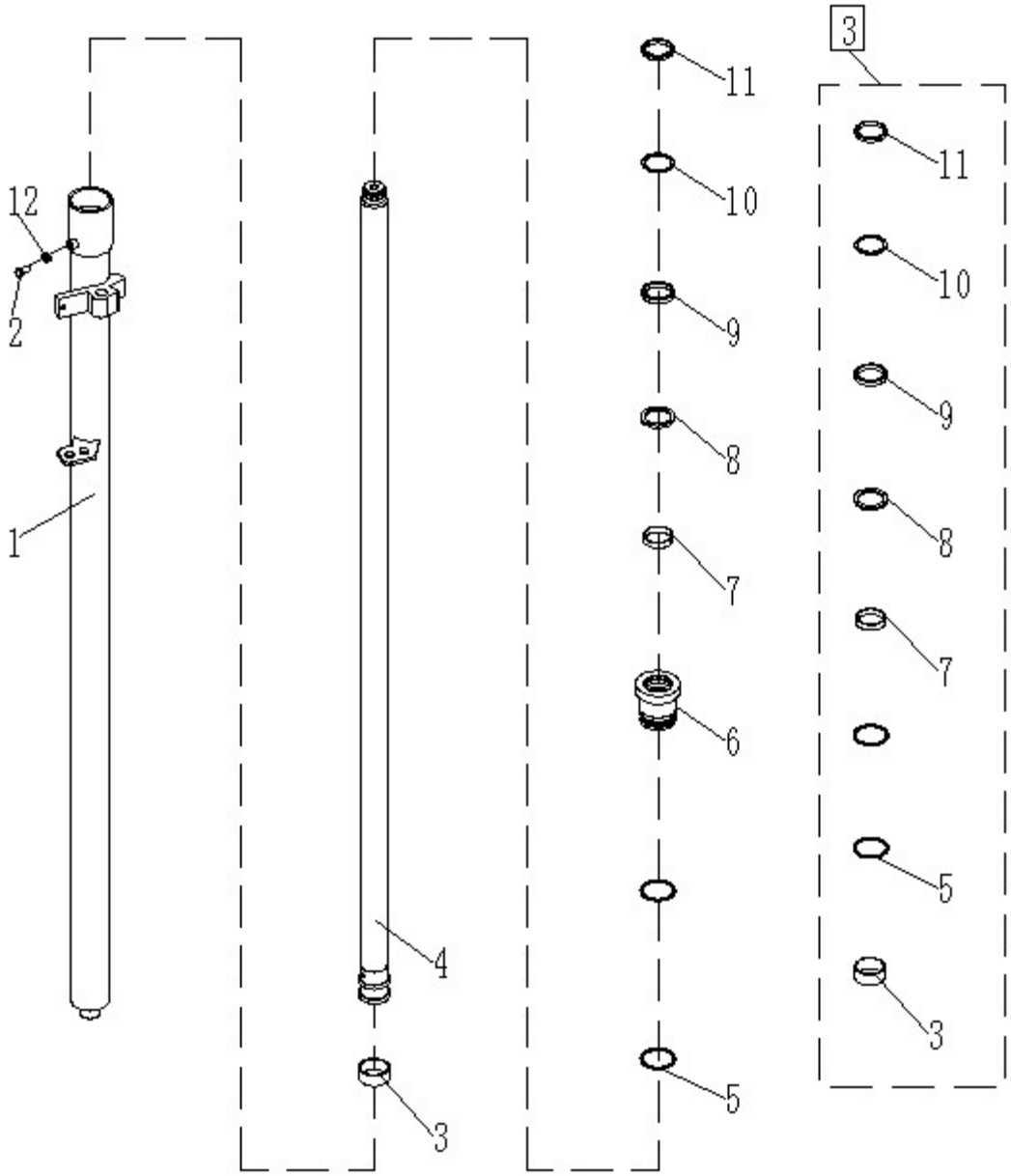

Fig. 33Right Lifting Cylinder（Two-stage-mast）

No.	Art No.	Description	Qty.	Note	Standard
1	9000009687	Cylinder	1	Two-stage-mast 2900	
	9000009688			Two-stage-mast 3200	
	9000009689			Two-stage-mast 3600	
2	0000023415	Screw	1	M8x10	GB/T70.1=ISO4762
3	9000009674	Supporting ring of hole	1	43X48X20	
4	9000009679	Piston rod	1	Two-stage-mast 2900	
	9000009680			Two-stage-mast 3200	
	9000009681			Two-stage-mast 3600	
5	0000022018	O ring	2	55X3.1	GB/T3452.1=ISO3601-1
6	9000009797	Guide sleeve	1		
7	9000009666	Supporting ring of axle	1	42X46X10	
8	9000009665	Seal ring	1	42X52.7X4.2	
9	9000009663	Y ring of axle	1	42X50X7.5/8	
10	9000009664	Circlip	1	42X50X2	
11	9000009661	Dust ring	1	42X50X5/6.5	
12	0000022026	Washer	1	8	JB/T982
□,3	9000009776	Sealing assembly	1		

Fig. 34 Free lifting cylinder

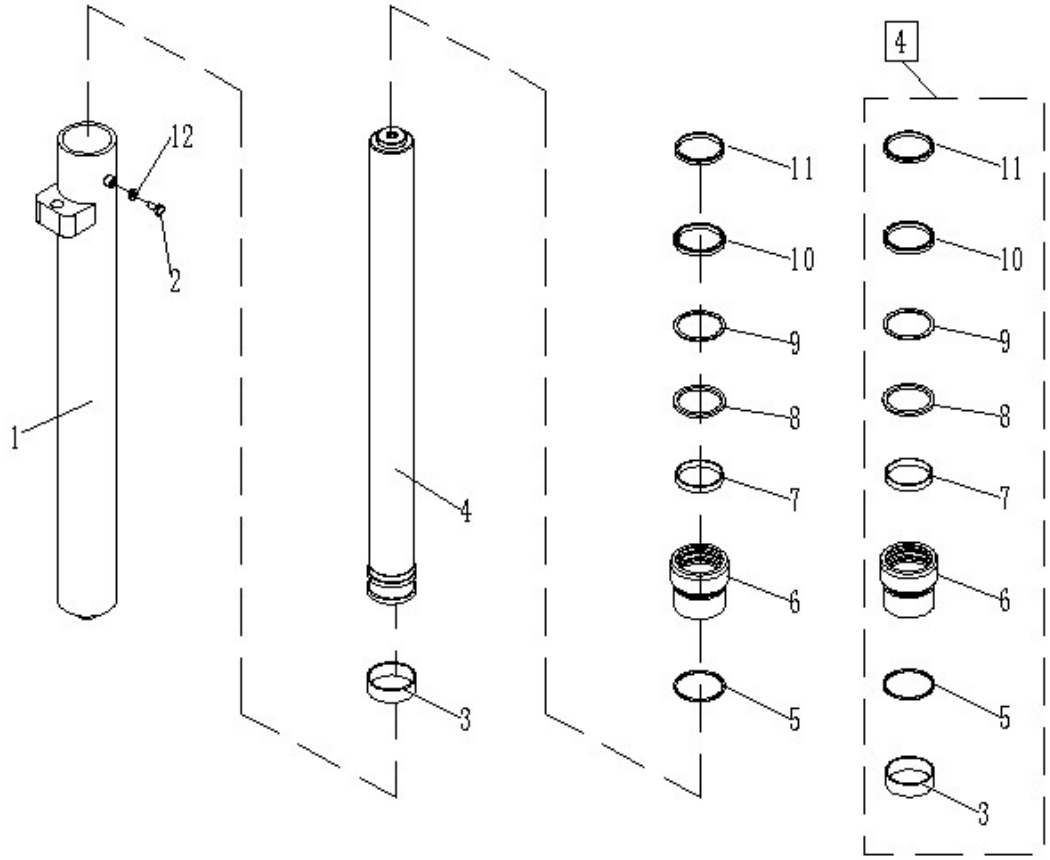

Fig. 34 Free Lifting Cylinder

No.	Art No.	Description	Qty.	Note	Standard
1	9000009700	Cylinder	1	Three-stage-mast 4000	
	9000009701			Three-stage-mast 4600	
	9000009702			Three-stage-mast5000	
	9000009703			Three-stage-mast5500	
2	0000023415	Screw	1	M8X10	GB/T70.1=ISO4762
3	9000009704	Supporting ring of hole	1	62X67X20	
4	9000009690	Piston rod	1	Three-stage-mast 4000	
	9000009691			Three-stage-mast 4600	
	9000009692			Three-stage-mast5000	
	9000009693			Three-stage-mast5500	
5	0000022070	O ring	1	70X3.1	GB/T3452.1=ISO3601-1
6	9000009699	Guide sleeve	1		
7	9000009698	Supporting ring of axle	1	60X64X10	
8	9000009697	Seal ring	1	60X70.7X4.2	
9	9000009695	Axle seal	1	60X70X6/7	
10	9000009696	Circlip	1	60X70X2	
11	9000009694	Dust cover	1	60X68X5/6.5	
12	0000022026	Washer	1	8	JB/T982
□,4	9000009777	Sealing assembly	1		

Fig. 35 Reach forward cylinder

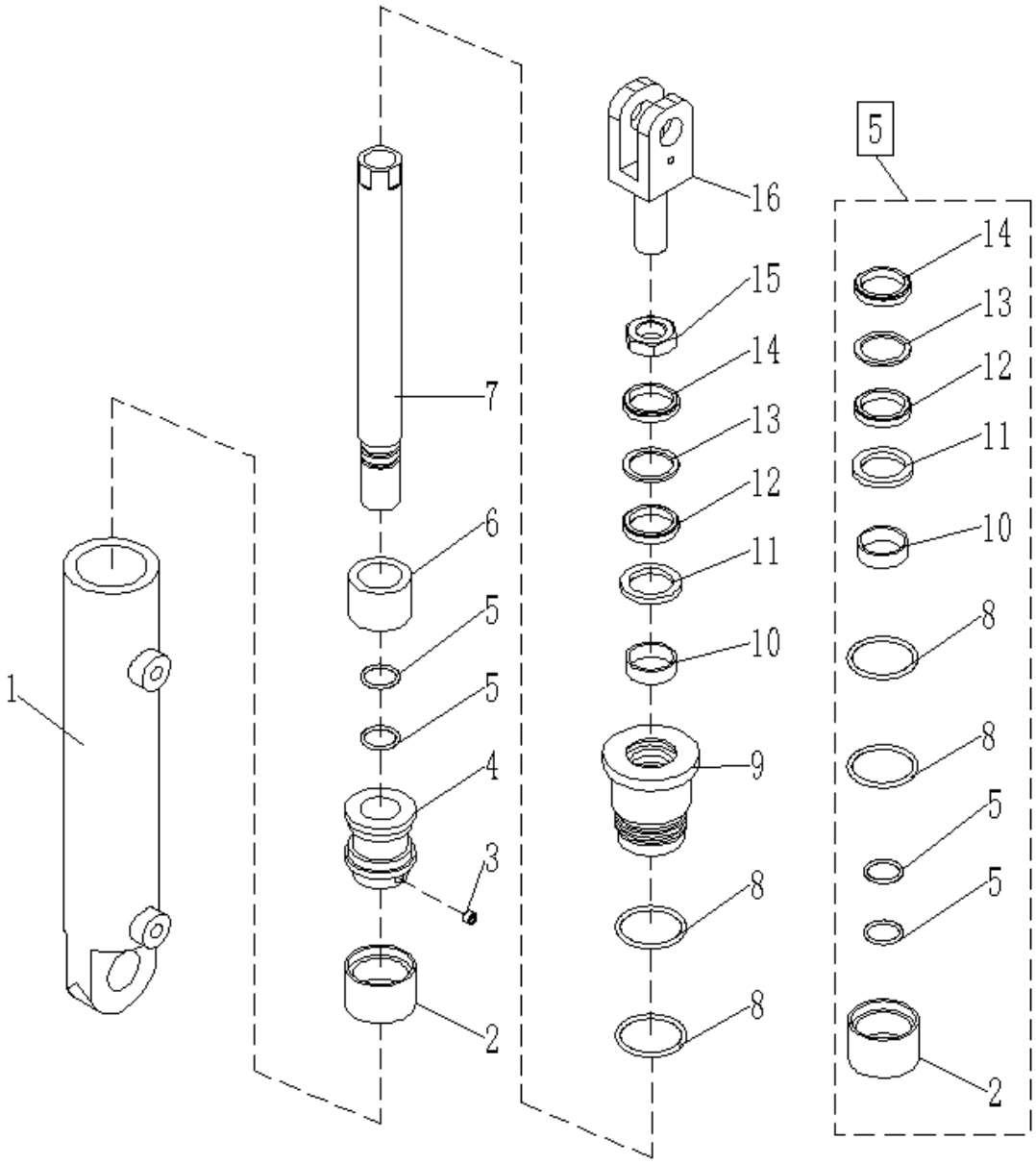

Fig. 35 Reach Forward Cylinder

No.	Art No.	Description	Qty.	Note	Standard
1	9000009713	Cylinder	1		
2	9000009716	Combination seal	1	45×35×16.4/6.35	
3	0090000529	Screw	1	M8×8	GB/T78=ISO4027
4	9000009715	Piston	1		
5	0000022109	O ring	2	25×2.4	GB/T3452.1=ISO3601-1
6	9000009714	Bushing	1		
7	9000009706	Piston rod	1		
8	0000022013	O ring	2	45×3.1	GB/T3452.1=ISO3601-1
9	9000009712	Guide sleeve	1		
10	9000009711	Supporting ring of axle	1	28×32×10	
11	9000009710	Seal ring	1	28×38.7×4.2	
12	9000009708	Shaft seal	1	28×35.5×5/5.7	
13	9000009709	Circlip	1	28×35.5×2	
14	9000009707	Dust cover	1	28×36×4.5/6	
15	0000024044	Nut	1	M20×1.5	GB/T6173=ISO8675
16	9000009705	Joint	1		
□,5	9000009778	Sealing assembly	1		

Fig. 36 Tilt cylinder

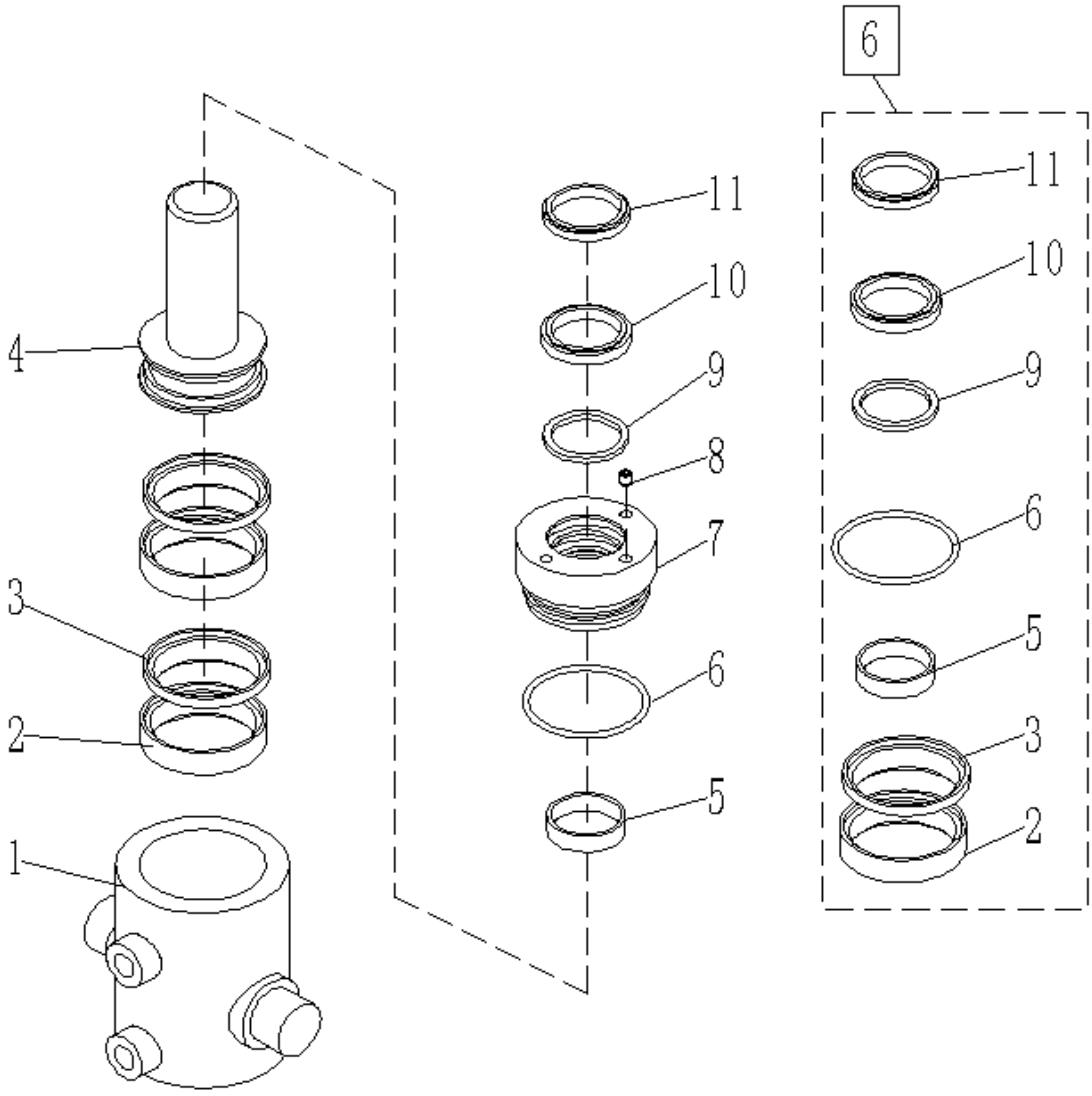

Fig. 36 Tilt Cylinder

No.	Art No.	Description	Qty.	Note	Standard
1	9000009723	Cylinder	1		
2	9000010041	Y ring	2	65X75X6/7	
3	9000010042	Circlip	2	65X75X2	
4	9000009717	Piston rod	1		
5	9000009722	Copper bushing	1	35×39×10	
6	0000022025	O ring	1	75×3.1	GB/T3452.1=ISO3601-1
7	9000009720	Guide sleeve	1		
8	0090000314	Screw	1	M6×8	GB/T78=ISO4027
9	9000009721	Seal ring	1	35×42.3×3.2	
10	9000009719	Axle seal	1	35×45×6/7	
11	9000009718	Dust cover	1	35×43×5/6.5	
□,6	9000009829	Sealing assembly	1		

Fig. 37 Main valve group

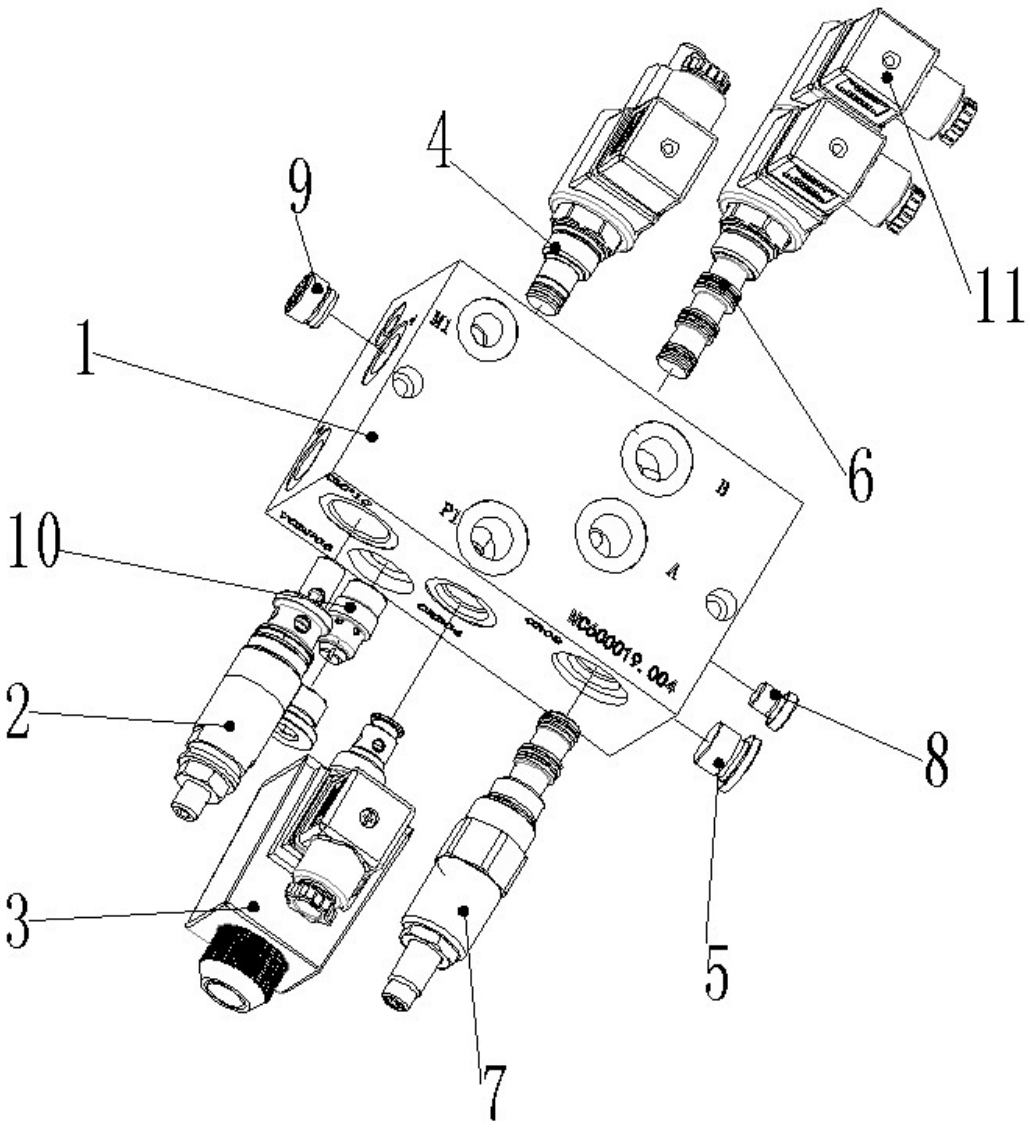

Fig. 37 Main Valve Group

No.	Art No.	Description	Qty.	Note
1	9000010319	Block	1	AL
2	9000009773	Overflow valve	1	Max320bar,set180bar
3	9000009770	Solenoid valve	1	24V DC
4	9000009803	Proportional valve	1	SP08/24V DC
5	2000323001	PlugG3/8"	3	G3/8"
6	9000010320	Solenoid valve	1	SV08
7	9000010321	Overflow valve	1	CR08/70bar
8	9000010322	Plug	8	G1/8"
9	9000010323	One-way valve	1	G3/8"
10	9000009774	Throttle valve	1	15L/min
11	9000008877	Connector	3	DIN

Fig. 38 Reach forward valve group

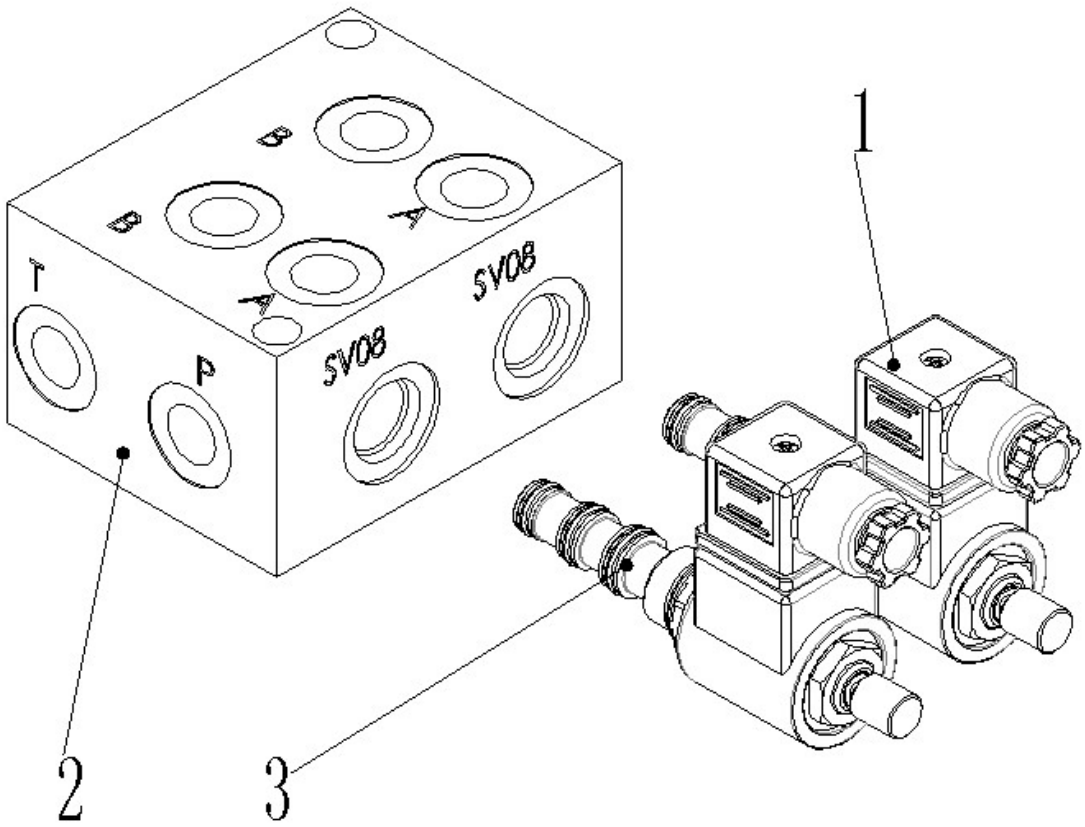

Fig. 38 Reach Forward Valve Group

No.	Art No.	Description	Qty.	Note
1	9000009755	Connector	2	Black
2	9000010317	Block	1	AL
3	9000010318	Solenoid valve	2	24V

Fig. 39 Pump system（4.0Kw）

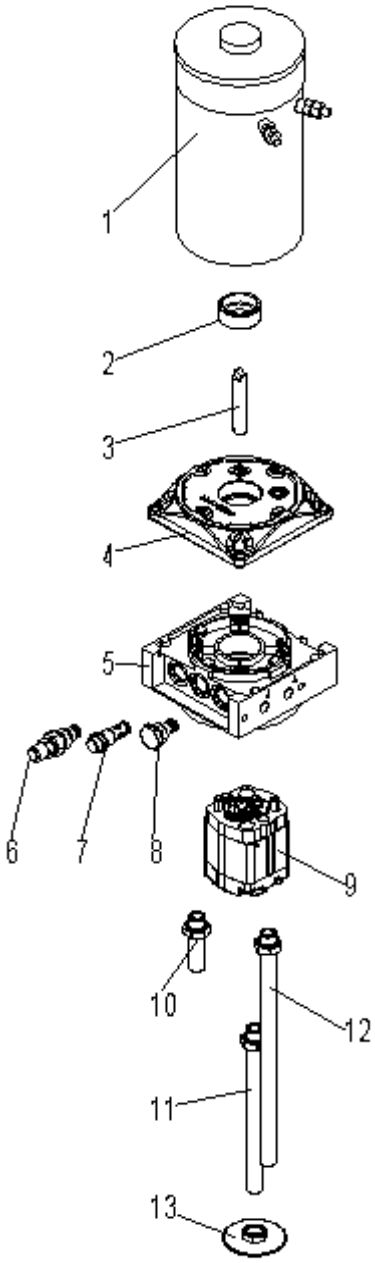

Fig. 39 Pump System（4.0Kw）

No.	Art No.	Description	Qty.	Note
1	9000009756	Motor	1	24V 4Kw
2	9000009757	Bushing	1	
3	9000009758	Coupling	1	
4	9000009759	Flange	1	
5	9000009760	Flange	1	
6	9000009761	Overflow valve	1	
7	9000009762	Check valve	1	
8	9000009763	Screw	1	
9	9000009764	Pump	1	4.2cc
10	9000009765	Hose	1	
11	9000009766	Hose	1	
12	9000009767	Hose	1	
13	9000009768	Filter	1	

Fig. 40 Handle arm assembly

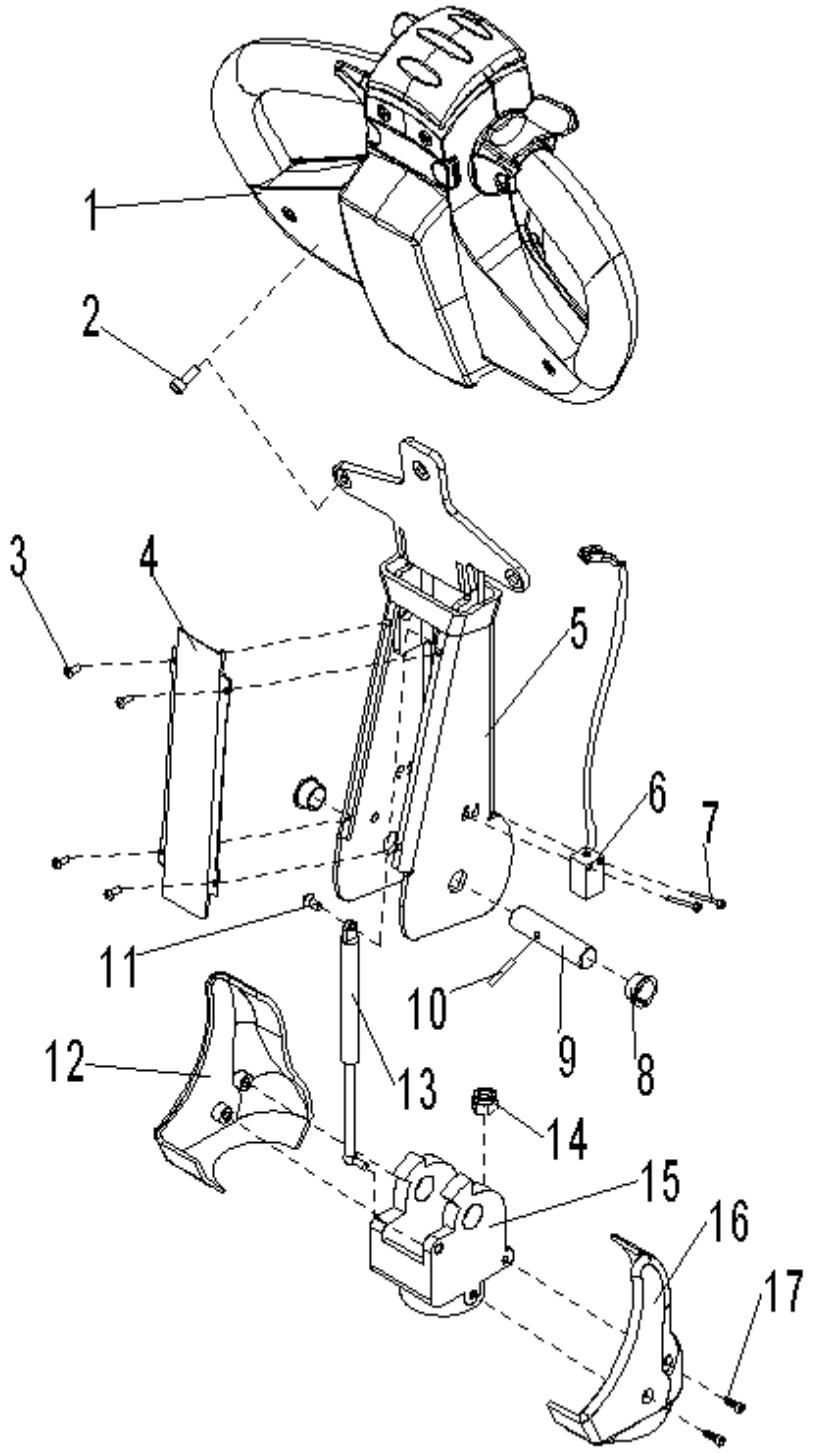

Fig. 40 Handle Arm Assembly

No.	Art No.	Description	Qty.	Note	Standard
1	9000008323	Handle	1		
2	0000023040	Screw	3	M6×16	GB/T70.1=ISO4762
3	1000123003	Screw	4	M4×8	GB/T70.2=ISO7380
4	9000008037	Cover	1		
5	9000008036	Hander bar	1		
6	9000008327	Proximity switch	1	NBN5-F7-E2	
7	0000023075	Screw	2	M3×20	GB/T70.1=ISO4762
8	1000113001	Bushing	2	□17×19×11	
9	9000007928	Axle	1		
10	0000028003	Dowel pin	1	4×24	GB/T879.1=ISO8752
11	1000123001	Screw	1	M8×20	
12	9000007930	Handle cover	1		
13	1000121001	Air spring (S≥55)	1	450N	
14	0000023005	Nut	2	M10	GB/T889.1=ISO7040
15	9000007929	Handle seat	1		
16	9000007931	Handle cover	1		
17	0000023519	Screw	4	M6×10	GB/T70.2=ISO7380

Fig. 41Handle

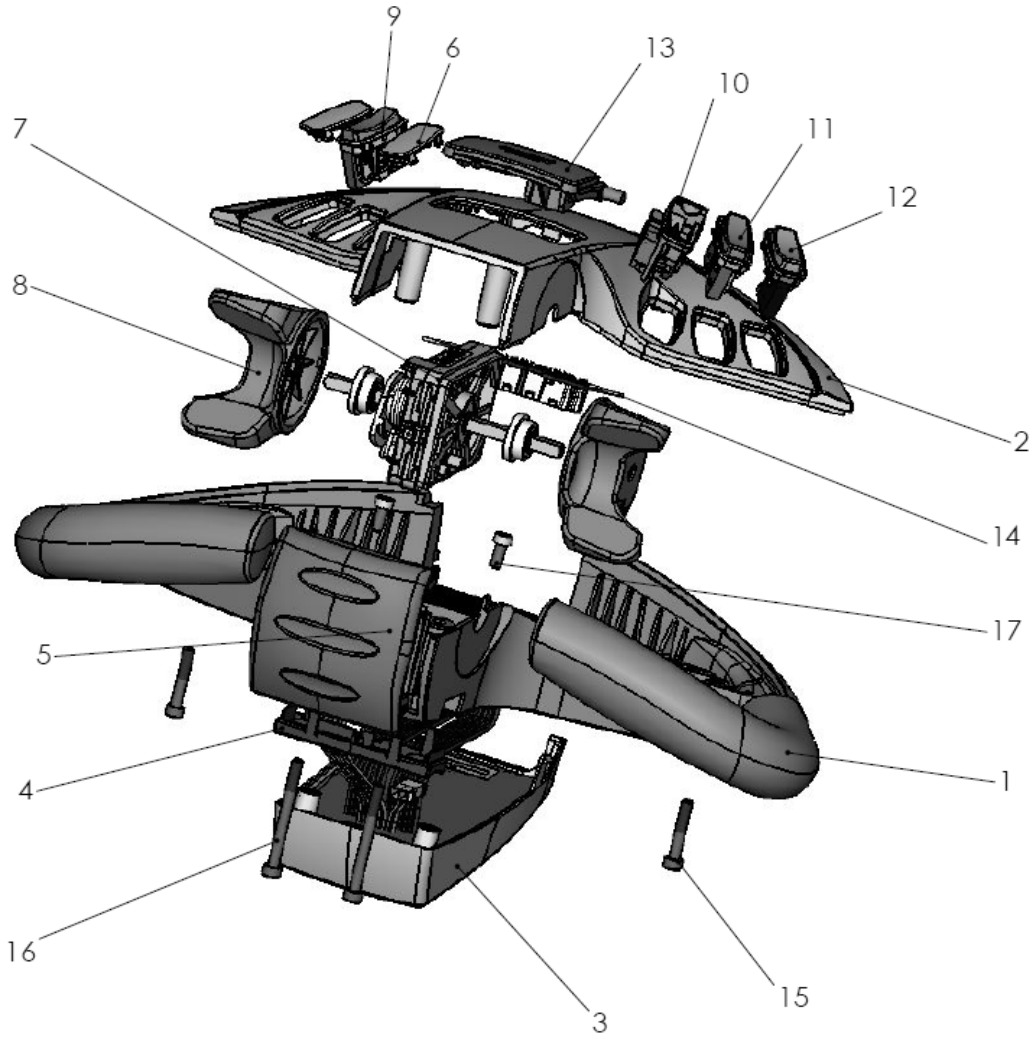

Fig. 41 Handle

No.	Art No.	Description	Qty.	Note
1	9000009837	Lower cover	1	
2	9000009838	Upper cover	1	
3	9000009839	Cover	1	
4	9000009840	Cap	1	
5	9000009841	Belly button	1	
6	9000009842	Cap	2	
7	9000009843	Accelerator switch	1	

8	9000009844	Drive knob	2	
9	9000009845	Scissor forward/backward button	1	
10	9000009846	Mast lift/lower button	1	
11	9000009847	Fork tilt up/down button	1	
12	9000009848	Slower speed button	1	
13	9000009849	Horn button	1	
14	9000009850	PCB board	1	
15	9000009851	Screw	2	
16	9000009852	Screw	2	
17	9000009853	Screw	2	

Fig. 42 Protective arm

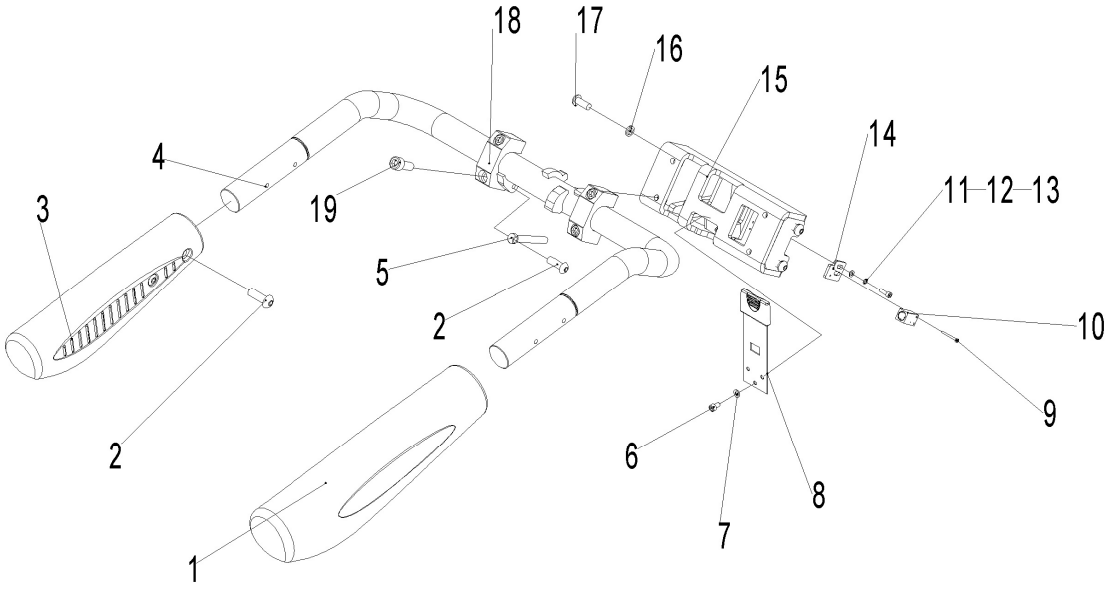

Fig. 42 Protective Arm

No.	Art No.	Description	Qty.	Note	Standard
1	9000007895	Right protective arm cover	1		
2	0090000448	Screw	5	M8×20	GB/T70.2=ISO7380
3	9000007896	Left protective arm cover	1		
4	9000007894	Protective arm	1		
5	9000007780	Air spring	1		
6	0000023045	Screw	3	M6×12	GB/T70.2=ISO7380
7	0000025010	Washer	3	6	GB/T93
8	9000007897	Spring	1		
9	0000023075	Screw	2	M3×20	GB/T70.1=ISO4762
10	9000008329	Proximity switch	1	NBN5-F7-E2	
11	0000025012	Washer	2	5	GB/T93
12	0000023032	Washer	2	5	GB/T95
13	0000023107	Screw	2	M5×16	GB/T70.1=ISO4762
14	9000009799	Switch transition plate	1		
15	9000007892	Protective arm seat	1		
16	0000023006	Washer	4	10	GB/T93
17	0090000447	Screw	4	M10×25	GB/T70.2=ISO7380
18	9000007893	Protective arm clamp block	2		
19	0000023099	Screw	4	M10×45	GB/T70.1=ISO4762

Fig. 43 Foldable platform

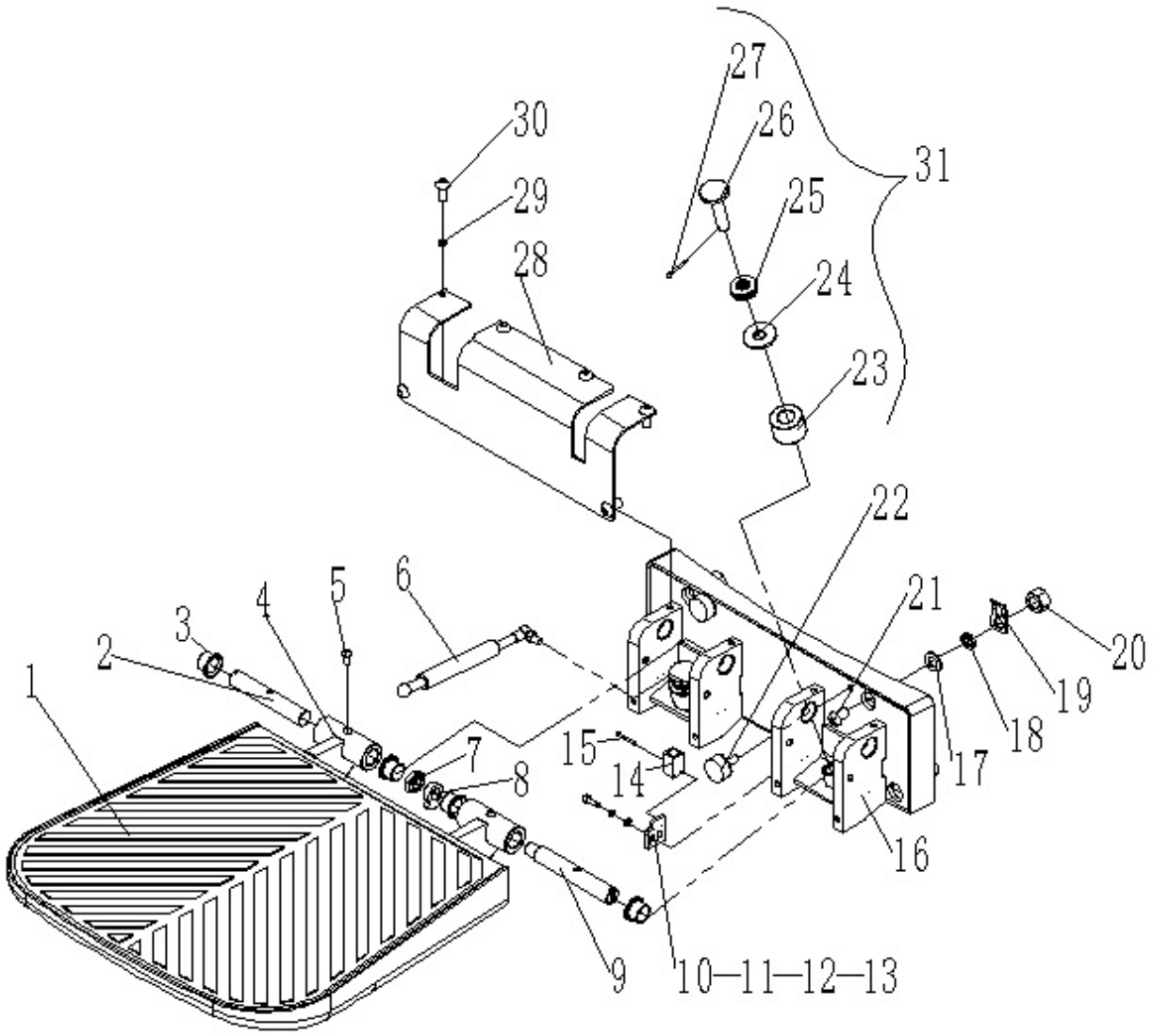

Fig. 43 Foldable Platform

No.	Art No.	Description	Qty.	Note	Standard
1	9000007867	Pedal pad	1		
2	9000007869	Rotating axle	1		
3	9000007799	Bushing	4	20×23×16.5	
4	9000007863	Foot platform	1		
5	0000023555	Screw	2	M6×16	GB/T70.2=ISO7380
6	2000421001	Air spring	1		
7	0000024014	Nut	1	M16×1.5	GB/T6173=ISO8675
8	9000007873	Cam	1		
9	9000007866	Cam shaft	1		
10	0000025012	Washer	2	5	GB/T93
11	0000023032	Washer	2	5	GB/T95
12	0000023107	Screw	2	M5×16	GB/T70.1=ISO4762
13	9000009799	Switch transition plate	1		
14	9000008328	Proximity switch	1	NBN5-F7-E2	
15	0000023075	Screw	2	M3×20	GB/T70.1=ISO4762
16	9000007864	Assemble seat	1		
17	0090000048	Washer	4	12	GB/T97.1-2002
18	0000025024	Washer	4	12	GB/T93
19	9000007874	Line hanging board	1		
20	0000024006	Lock nut	4	M12	GB/T889.1=ISO7040
21	0090000450	Screw	4	M12×45	GB/T70.2=ISO7380
22	9000007865	Cushion	2		
23	9000007872	Anti-vibration pad	2		
24	9000007871	Anti-vibration washer	2		
25	0000031001	Spring	8	16.3×31.5×1.75	GB/T1972-2005
26	9000007870	Fixed bolt	2		
27	0000028033	Split pin	2	3.2×20	GB/T91=ISO1234
28	9000007868	Assembly seat cover	1		
29	0000025010	Washer	6	6	GB/T93
30	0000023045	Screw	6	M6×12	GB/T70.2=ISO7380
31	9000008897	Suspension assembly	2		

Fig. 44 Battery

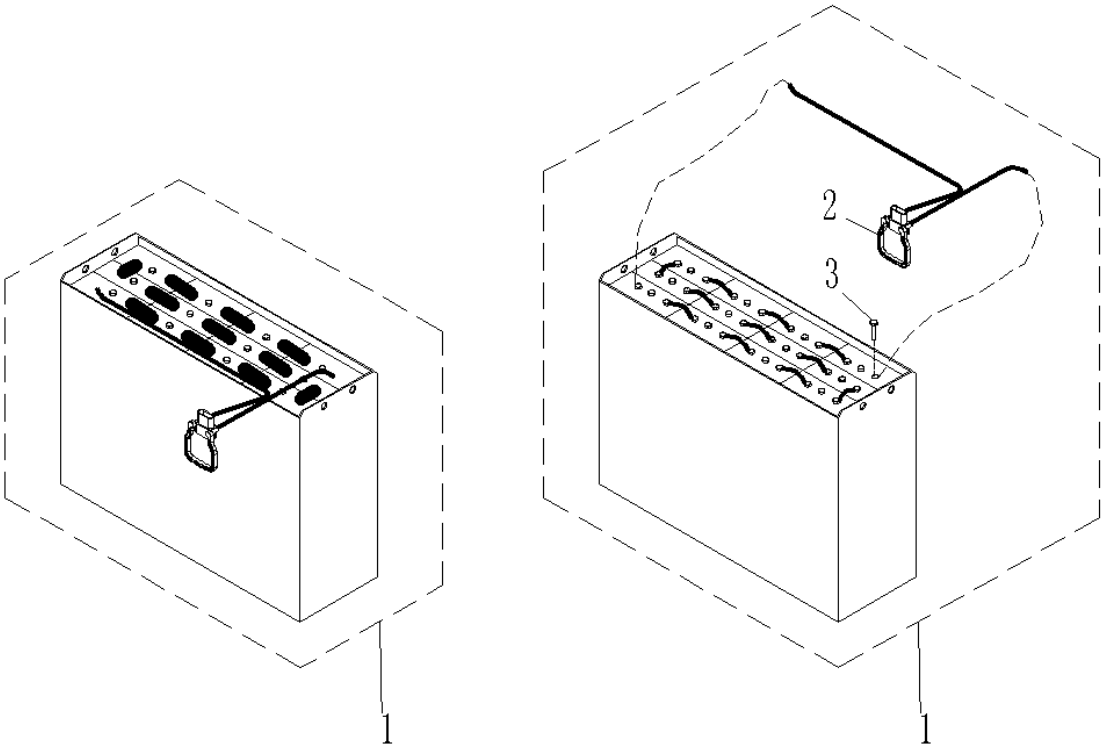

Fig. 44 Battery

No.	Art No.	Description	Qty.	Note
1	9000008042	Battery	1	Weld type
	9000009830			Bolt type
2	9000003987	Connector	1	Only for bolt type battery
3	9000009832	Screw	24	Only for bolt type battery

Easy worn parts list

No	Art No.	Description	Qty	Fig./Position	Note
1	9000007797	Bushing25×28×22	2	Fig.7/6	Scissor assembly（Three-stage-mast）
2	9000007758	Compound Roller 1	4	Fig.7/14	
3	0000027040	Bushing 25×28×25	4	Fig.7/26	
4	9000007797	Bushing 25×28×22	2	Fig.8/6	Scissor assembly（Two-stage-mast）
5	9000007758	Compound Roller 1	4	Fig.8/14	
6	0000027040	Bushing 25×28×25	4	Fig.8/27	
7	9000007798	Bushing 25×28×25.5	4	Fig.9/2	Fork assembly
8	2400527001	Bushing 20×23×14	2	Fig.9/3	
9	9000011906	Compound Roller	4	Fig.9/11	
10	9000007796	Bushing 50×55×23	2	Fig.9/12	
11	0000027001	Bearing 6204	8	Fig.10/4	Load roller assembly（Tandem）
12	9000007769	Load roller 102×70	4	Fig.10/5	
13	2400527001	Bushing 20×23×14	4	Fig.10/6	
14	9000003645	Load roller	4	Fig.10/□,2	
15	0000027011	Bearing 6307	4	Fig.11/5	Load roller assembly（Single）
16	2400405002	Load roller 230X80	2	Fig.11/6	
17	9000003986	Load roller	2	Fig.11/□,2	
18	9000007758	Compound roller	4	Fig.12/11	Mast assembly（Three-stage-mast）
19	9000007757	Compound Roller	4	Fig.12/13	
20	9000007757	Compound roller	4	Fig.13/10	Mast components（Two-stage-mast）
21	9000007804	Hinge	2	Fig.14/9	Cover structure（Three-stage-mast）
22	9000007804	Hinge	2	Fig.15/9	Cover structure（Two-stage-mast）
23	9000007807	Lock	2	Fig.16/2	Truck body
24	0000027060	Bearing 6202	12	Fig.17/3	Roller assembly
25	1000434040	Fuse10A	2	Fig.21/6	Electrical steering assembly
26	9000008635	Fuse350A	1	Fig.21/10	Lifting hydraulic system

27	3042434014	Fuse15A	1	Fig.21/26	（Three-stage-mast） Left lifting cylinder （Three-stage-mast）
28	9000007806	Damper	1	Fig.24/7	Left lifting cylinder （Two-stage-mast）
29	0000027012	Bearing6206	2	Fig.25/24	Right lifting cylinder （Three-stage-mast）
30	9000009776	Sealing assembly	1	Fig.30/□,3	Right lifting cylinder （Two-stage-mast）
31	9000009776	Sealing assembly	1	Fig.31/□,3	Electrical steering components
32	9000009776	Sealing assembly	1	Fig.32/□,3	Lifting hydraulic system （Three-stage-mast）
33	9000009776	Sealing assembly	1	Fig.33/□,3	Left lifting cylinder （Three-stage-mast）
34	9000009777	Sealing assembly	1	Fig.34/□,4	Free lifting cylinder
35	9000009778	Sealing assembly	1	Fig.35/□,5	Reach forward cylinder
36	9000009829	Sealing assembly	1	Fig.36/□,6	Tilt cylinder
37	1000113001	Bushing17×19×11	2	Fig.40/8	Handle arm assembly
38	1000121001	Air spring(S≥55) 450N	1	Fig.40/13	
39	9000007780	Air spring	1	Fig.42/5	Protective arm
40	9000007897	Spring	1	Fig.42/9	
41	9000007799	Bushing	4	Fig.43/3	Foldable platform
42	2000421001	Air spring	1	Fig.43/6	
43	9000008897	Suspension assembly	2	Fig.43/31	
44	9000003987	Connector	1	Fig.44/2	Battery
45	9000009832	Screw	24	Fig.44/3	